DOCUMENT RESUME

ED 047 497 EM 008 697

AUTHOR	Meredith, Joseph C.; Ferguson, Douglas
TITLE	Student Feedback as a Tool in Computer-Assisted Instruction (CAI) Frame Development.
INSTITUTION	Indiana Univ., Bloomington. Research Center for Library and Information Science.; Stanford Univ., Calif. Libraries.
PUB DATE	70
NOTE	83p.
JOURNAL CIT	International Journal of Experimental Research in Education; v7 n2 p229-302 1970
EDRS PRICE	EDRS Price MF-$0.65 HC-$3.29
DESCRIPTORS	*Computer Assisted Instruction, *Feedback, Programed Instruction, Programed Units

ABSTRACT

In order to measure the value of student feedback in contributing to the refinement of instructional frames in computer-assisted instruction (CAI), a stand-alone CAI frame was written around a question designed to elicit a wide variety of replies. Half of a real sample of fifty handwritten responses were submitted to the frame, with a match score of 96% and a sense score of 40%. After revision, the frame attained a match score of 100% and a sense score of 88%, on the other half of the test set. Conclusions drawn from the study were that (1) for an open question with a large number of legal answers and an adult, heterogeneous student set, a striking improvement in meaningful intercept can be obtained through close analysis of a modest number of live responses; and (2) as a corollary, the rate of improvement to be derived from close analysis beyond this modest number must decline quite rapidly. In the report of the study, selected-string-match CAI strategies and the mechanics of the CAI "macroframe" are discussed. Appendices contain supporting materials. (Author/MF)

ED 047497

SCIENTIA PAEDAGOGICA EXPERIMENTALIS

INTERNATIONAL JOURNAL OF EXPERIMENTAL RESEARCH IN EDUCATION — REVUE INTERNATIONALE DE PÉDAGOGIE EXPERIMENTALE — INTERNATIONALE ZEITSCHRIFT FÜR EXPERIMENTALE PÄDAGOGIK — INTERNATIONAAL TIJDSCHRIFT VOOR EXPERIMENTELE PEDAGOGIEK

Edited by — Édité par
Herausgegeben von — Uitgegeven door

R. VERBIST / Gent

with the cooperation of — avec le concours de
unter Mitwirkung von — met de medewerking van

A. CLAUSSE / Liège — E. FELDMANN / Bonn
J. T. HUNT / Athens, Georgia (U.S.A.)

VII, 2

Uitgegeven met de steun van
het Belgisch Ministerie van Nationale Opvoeding,
en van de Universitaire Stichting van België

GENT, HENRI DUNANTLAAN, 1
1970

U.S. DEPARTMENT OF HEALTH, EDUCATION & WELFARE
OFFICE OF EDUCATION
THIS DOCUMENT HAS BEEN REPRODUCED EXACTLY AS RECEIVED FROM THE PERSON OR ORGANIZATION ORIGINATING IT. POINTS OF VIEW OR OPINIONS STATED DO NOT NECESSARILY REPRESENT OFFICIAL OFFICE OF EDUCATION POSITION OR POLICY.

EM 008 697

STUDENT FEEDBACK AS A TOOL IN COMPUTER-ASSISTED INSTRUCTION (CAI) FRAME DEVELOPMENT

by

Joanne C. [illegible] (Research Center for Library and Information Science, Graduate Library School, Indiana University) and Douglas Ferguson (Editor, Automation Department, Stanford University Libraries)

Background and objectives

This paper represents an attempt to measure the value of student feedback in contributing to the refinement of instructional frames in Computer-Assisted Instruction (CAI). In our own work in CAI for graduate students (specifically for students of library science) (1) we have concentrated on the development of a « machine tutorial mode » suitable for presentation of conceptual material to an adult and very mixed student population. We must keep in mind students whose sole preparation is a liberal arts degree — others who hold degrees in the sciences — and still others with abundant experience as practicing librarians. Primary interests range from children's libraries to the upper reaches of information theory. Ages range quite evenly through the twenties, thirties, and forties.

In order to be effective on an individual basis, we have felt that we must make the machine side of the program as versatile as possible, with a very broad capability for dealing with idiosyncratic responses. Whatever we do will fall far short of human discourse; we cannot pretend to cope with meanings which have not been anticipated; but we can at least take advantage of observed patterns of speech and thought in order to avoid more formal constraints on dialogue than are absolutely necessary.

---

(1) Described in the interim report on Project No. [illegible] (OEG-[illegible]) : *An information processing laboratory for education and research in library science : Phase I* (M. B. [illegible], A. J. [illegible], and J. C. [illegible]), DHEW (OE) July, [illegible].

What about these patterns? It is sometimes said that pre-planned conversational CAI quickly reaches an area of diminished return, because of the massive intellectual and clerical effort required to prepare even a short sequence (1). This might be true if the CAI author were to work in a vacuum, drawing on the single resource of his own semantic store. But what if he were to demand less of this for-the-most-part intuitive, remembered, and general resource and rely more on live results derived from preliminary testing? We know that student feedback is useful in revising programmed learning, but we need to know more about the extent of this usefulness and to decide when and how best to exploit it.

This, quite simply, was the idea behind what we thought would be a straightforward exercise in recursive improvement of a single CAI frame. If we had had an earlier indication of how striking the results would be, we would have structured the test more rigorously. Even so, we feel that the controls are adequate to justify reasonable confidence. Also, we did take the precaution of drafting and documenting Part I of this paper before proceeding with the second part of the experiment, which is described in Part II.

Part I

Procedure

Fifty individuals were polled in writing (Appendix A) with a request that they indicate what single response they might have given to a certain statement/question, in an on-line situation at a student terminal. Individuals were chosen at random from among library school students, faculty, and technical and clerical staff of the Institute of Library Research, University of California, Berkeley, California. In using subjects from this environment it was hoped that we could compensate in part for the lack of instructional preparation leading up to the statement/question. At the same time we realized that a minimum of this lack of context would need to be accommodated within the frame itself, to an uncommon degree. « Success », as we viewed it, would be measured as much by the effectiveness of this accommodation as by the efficiency of the match and fail processes of the system.

---

(1) William R. Uttal et al. expresses this view in *Generative Computer Assisted Instruction* (Communication #243 of the Mental Health Research Institute, University of Michigan, January, 1969).

5

Respondents were asked to write down their first response to the question as worded. No explanation or comment was provided at the time. The fifty answers were serially divided into sets of twenty-five each to make up an « A » list and a « B » list, and the former was submitted to a previously-written program called the « A-Frame ». The results are described and analyzed in the sections which follow.

We then revised the *A-Frame* in the light of what we had learned, and tested the effectiveness of this version (the « B-Frame ») against the « B » list of answers. *Appendices A through I* document the steps which were taken before conducting this second test.

THE PROGRAM

In designing the *A-Frame* we assumed programming language capabilities corresponding with PILOT (1), the CAI language in use in the Institute's Information Processing Laboratory, with minor technical augmentations provided in DISCUS (2). Both languages employ selected character string match as the basic answer-matching routine. That is, student input of any length will be successfully matched in a scanning operation if the elements specified in the scan are present. The remainder of the input is ignored.

---

(1) See [illegible] et al., *PILOT: a Conversational Language — User's Guide* (Office of Information Systems, University of California Medical Center, San Francisco, California, December, [illegible]).

(2) Developed by Steven S. Silver, ILR staff member, and now implemented at both the Berkeley and Los Angeles campuses of the University of California. Documentation available from the Institute of Library Research, University of California at Los Angeles, California. User's Manual in Press.

A successful match between a scan element and an input element (student answer) triggers a unique set of program reactions. A match does not signify rightness or wrongness of a response. It refers only to the detection of a single element.

In practice, the reaction provided for a response which is *correct* from the teacher's viewpoint will consist of displaying to the student a statement to that effect, then making a record of the fact — for scoring and control purposes — and then exiting to the next frame. The reaction provided for *incorrect* matched responses may consist of a critical or cueing display followed by a return to the question. Or it may be followed by a critical statement incorporating the correct answer and then exiting to the next frame. The same scoring and control tallies can accompany this operation.

Lastly, the program reaction on *failure* to match any of the input is usually the display of a succession of two or three cueing responses ending with one which gives the correct answer. The student is then passed to the next frame, or in rare cases he may be advised to sign off and seek the help of an instructor. Fail-match tallies are also recorded for control and scoring purposes. Naturally, dependence on *fail* routines must be kept to a minimum if meaningful instructional dialogue is to be attained.

THE FRAME

The frame, as such, is primarily an instructional concept. It may be programmed in a variety of ways, but usually it is composed of a question or other requirement displayed to the student (and usually preceded by a didactic statement of some kind), followed by a computer-waiting condition which allows the student to insert his response, which is in turn followed by a program reaction to that response. The program-reactive display may be subjoined by text which is really the beginning of the next frame, but the transition is not always apparent to the student ; only the author/instructor needs to be aware of frame boundaries, in order to assemble his planned dialogue properly.

For the purpose of this study, we envisaged a single frame with five « satellite » frames. Each of the satellites would be used to supply an element of information requested by the student, and to ask him if the information sufficed. If so, he would be returned to the main frame; if not, he could elect either to pass to the next frame or to sign off. We call the whole complex of main frame and satellites a « macro-frame ».

By calling up the satellites one by one, it is possible to provide independent subroutines which *look* like frames, i.e., each has a question, a wait mode, and a reaction, but which would never be used as instructional units by themselves. It would be possible to merge these mechanisms in the main frame, but this would require elaborate controls to prevent mutual interference.

Another alternative is to maintain an instructional *glossary* in a separate file, to which the student has access at all times. This type of facility can be programmed in the more powerful systems, but its greater scope needs to be weighed against the advantages of defining a term in context.

A flowchart of the A-Frame is given in Appendix B, and an abridged version of the actual machine program which would implement it in Appendix C. (Scoring devices and extensive text are omitted throughout).

SCANNING

Student input can be scanned for certain words or parts of words, in specified order or (if desired) in any order. Scan specifications can also be nested (DISCUS) in such a way that input is tested in its entirety first for one set of elements, and, if successful, for additional sets of elements. This permits very elaborate decision trees.

A « not » facility can also be used (DISCUS) to destroy any match condition when a specified *unwanted* element crops up in the response. This could lead to a solution of the problem of dealing with negatives, double negatives, triple negatives, etc., if an effective means of dealing with negative affixes can be developed.

A series of scan specifications is always designed with a series of answers in mind. We have found it useful to categorize these along the following lines :

6

A_L	(Answer, Legal)	A block of student input (a) of limited length, (b) containing at least one term relevant to the question or its context, and (c) in syntactical order.
A_I	(Answer, Illegal)	Any block of student input not meeting the above requirements.
A_{LP}	(Answer, Legal, Perceived)	Any A_L which can be predicted by the author / instructor, as possible input.
A_{LPM}	(Answer Legal, Perceived, Matched)	Any A_{LP} which the author/instructor chooses to deal with uniquely.
A_{LPF}	(Answer, Legal, Perceived, Failed)	Any A_{LP} which the author deems so remote or so inconsequential or so difficult to deal with in its existing form that it should be failed.
A_{LU}	(Answer, Legal, Unperceived)	Any A_L which the author fails to predict as a possibility.
F	(The sum of failed answers)	$A_I + A_{LU} + A_{LPF}$

The type of answer which principally occupies our attention is A_{LPM}. It is not necessary that the author have in mind everything that the student might say embodying the A_{LPM} element(s). It *is* necessary that he select cue elements which are likely to match with a broad range of responses relevant to the question. In other words, he formulates a key word or phrase which will match members of a set of semantically similar input, and which will distinguish semantically dissimilar input by failing to match with it.

The range of A_{LPM} is directly influenced by the form of the questions which precede them. A question posing a very rigid requirement (*e.g.*, True-False) reduces the number of A_{LPM} to a minimum, but at the same time it vitiates the conversational mode. Our current goal is to open up questions and to give the student as much freedom in formulating his response as we can, without letting match probability fall below acceptable levels.

Appendix D lists the statements which would be displayed to students in response to various $A_{1,2,3}$ and F answers in the A-Frame, both initially (first pass) and successively (subsequent passes). Other elements of the program's reactions may be construed by referring to *Appendix B* and to the supporting material in *Appendix C*. As demonstrated by the imaginary dialogues at the end of *Appendix D*, it would be possible for the student to get through the frame very rapidly indeed. On the other hand, it would also be possible for him to flounder around in it for several minutes.

THE STATEMENT/QUESTION

In a pamphlet entitled *Microfiche Systems Planning Guide* (1) (J. M. Baptie, ed.), appear the following statements :

> There are three basic types of unit microforms. These are : (1) the transparent film sheet, or microfiche, with a moderate to high page capacity; (2) the opaque Microcard®, with a moderate to high page capacity; (3) the aperture card, with a low page capacity ... (p. 4)

and

> To date, the significant microfiche applications appear to be : (1) distribution of technical report literature ... (p. 5)

These statements were reformulated into the statement/question on the student form (*Appendix A*), i.e.,

> There are three basic types of unit microforms. These are :
> (1) The transparent film sheet, or microfiche,
> (2) The opaque microcard,
> (3) The aperture card.
> Which of these do you think is the most suitable for dissemination of technical literature ? Why ?

In the absence of extensive preparation, this is obviously a very faulty combination. What does the teacher mean by *unit microforms* ? Is *microfiche* the same as *transparent film sheet*, or are they offered as two different things? What are the microfiche, the opaque microcard, and the aperture card really like, anyway? By « which » does the teacher mean « which one? » What *mode* of dissemination is meant? Suitable for whom? What are the conditions that generally govern the dissemination of technical literature?

---

(1) Copyright 1963 by Microcard Corporation, West Salem, Massachusetts.

To cap it all, the instructor asks « Why? », which would be an excellent question element if it weren't preceded by such a confusing array.

It might be possible for a person armed only with an amateur's knowledge of photography and with the nature of technical literature to come up with the correct answer. However, it was not our purpose to establish this, but rather to see whether all respondents might be led to a degree of understanding which would permit them to formulate a correct response. This seems to accord with the theory that (at the problem-solving level) learning acquired through active participation by the student is more useful and durable than that which is passively ingested by him.

EXPERIENCE WITH THE « A » SET OF ANSWERS

As stipulated, twenty-five answers from the 50-answer sample were used to test the scans (SC) and their associated reaction tests in the « A-Frame ». It was expected that the « A » set of answers would reveal omissions and unforeseen ambiguities latent in the scan specifications. For example we might have specified

(SC) CLARITY, LEGIBLE, CLEAR,
EASY EYES, EASIER EYES

with the idea of picking up something like

It's better because it's more legible.

But then the occurrence of

« It's better because it's more readable »

among the sample answers would show the need to add READABLE to the specification.

Also the answers were expected to turn up instances wherein the program reaction test should be modified to accommodate variant input expressions. For example suppose we wanted to treat alike all answers expressing preference for microfiche because it is readily reproducible. We might write the reactive text in the following form :

« YES, IT IS ».

Then if one of the samples turned out to be

« I prefer microfiche because a simple copy machine can make copies very quickly and cheaply »

clearly the reactive text would need to be adjusted. (Sometimes the reaction logic goes completely awry and new subroutines have to be added. In other cases the change of a single word will suffice to make the reactive text more broadly suitable).

Both of these expectations were fulfilled, but we also discovered that the means for dealing with the « I don't know » family were completely inadequate. And this led to one of the most interesting developments to come out of the experiment.

The « I don't know » Category

The idea had been to scan for versions of « I don't know » occurring with any of the following essential elements :

DISSEMINATION (TECHNICAL LITERATURE)
APERTURE (CARD)
UNITIZED (MICROFORM)
(MICRO) FICHE (TRANSPARENCY SHEET)
(MICRO) IMAGE (CARD, MICROCARD)

and to deal with them in the five satellite frames. If more than one of the separate elements occurred in an « I don't know » answer, an appropriate succession of satellites would be called up.

Expressions of plain « I don't know » or its variants would invoke a response asking the student to identify the terms he needed to have explained.

Expressions of « I don't know » together with unidentified matter would invoke a similar response, also letting him know that a portion of his answer had not been understood.

Altogether, eight of the twenty-five answers fell into these last two categories !

Group I — Don't know — no further clue

- ●1 I don't know.
- ●2 I don't know.
- ●3 I really haven't the slightest idea.

Group II — Don't know — plus unidentified matter

- ●5 I don't know enough to decide.
- ●8 I don't know what these are exactly. So can't tell.
- ●7 I don't know. They all seem about equivalent to me.
- ●10 Not enuf info to answer this — would need to know properties of microforms and kinds/quality of available photocopy.
- ●11 I've only had occasion to use the microfilm on reels, so I can't really say.

A ninth answer, « I can't honestly compare because I am not familiar with all 3 of the media », really belongs in Group II, except that it was caught accidentally by the scan for « I don't know » + « aperture card (3) ».

On revision, we sought to identify the clues in ●7, ●10, and ●11 and to modify the scans as follows :

- ●7 — scan for « all, seem, equivalent » and provide explanatory routine (probably a [illegible]).
- ●10 — add « enuf » and « info » to the « don't know » specification.
- ●11 — scan for « reels, rolls », etc. Although microfilm on reels is outside of the problem, it is relevant and may provide a good insertion point inside of the problem; so we would write an additional statement covering it.

The original programmed response to Group I was « I'll be glad to explain any of the terms I've used, if you wish. Just type 'Clarify—' ».

The original programmed response to Group II was « I don't understand exactly what you need to have clarified ».

Answer ●10 would have fallen through to F10. (another accident) because « enuf » and « info » had been omitted from the scan specification. However, as luck would have it, the programmed response was not too bad : « How's that again? I don't understand your response as worded ».

But all these responses fail to differentiate between cognitive states which would be fairly obvious to a human interlocutor. Granted that we can patch up ●7, ●8, ●10, and ●11, the remaining five raise some interesting theoretical points which we are now obliged to deal with.

INFORMATION-STATE, MOTIVATION, AND MOTIVATIONAL INDICATORS

For the purpose of this study it has seemed reasonable to make certain assumptions regarding the information-state signalled by « I don't know ». Without really plumbing the depths of cognitive theory, we might say that :

1. Information, in order to be recognizable as such by more than one person, must be capable of being expressed in terms which mean approximately the same thing to others. This set of agreed meanings is the basis for semantic transfer.
2. *Awareness* of information requires a substrate, comprised of relatable units...(1) the presence, absence, and quality of which tend to bound the ultimate knowledge state.
3. The cognitive process (either self-generated or derived from an outside source) consists of a perception of some kind of logical structure formed by the relationships between the information units. The integrity of this perception depends on the individual's synthetic skill and on the accuracy/completeness of the substrate. Its transferability depends on semantic equivalence (1, above).
4. Self-sustaining cognition can be triggered by an outside stimulus or by an influx of critically related information units. In either case it represents a learning process which engages the student's whole attention. Derived cognition, on the other hand, while it may be accepted, probably does not command the student's attention to the same degree.

The order in which the first three assumptions are stated is not meant to imply an unvarying sequence. For example, gaps in the informational substrate do not preclude formation of a knowledge structure, even though the structure may be somewhat tentative and unstable until the gaps are filled in. Nevertheless, the existence of some substrate appears to be prerequisite to structural perception, so a progression from (2) to (3) can be stated as a fifth assumption. (In fact, we might think of structural perceptions being packed down in use until they can be employed as informational units, to serve as substrate elsewhere. But the reverse of such a process is hard to imagine).

---

(1) *Ausubel might speak of these as « anchoring ideas ».* See D. P. Ausubel, *Educational Psychology : a Cognitive View* (New York, Holt, Rinehart and Winston, 1968) (esp. « Learning and the availability of relevant anchoring ideas », p. 132 et seq.).

Probably none of the assumed conditions could be brought about in the absence of some kind of motivation, and it appears reasonable to suppose that this element is strongest at the moment of creation, i.e., when the structure is about to be perceived. Can we, then, use motivational indicators to tell us something about the student's cognitive state? For example, from expressions of disinterest that a semantic block exists, or that the informational substrate is so fragmentary that nothing can be made of it?

Does a request for specifics indicate that the structure — though shaky — is beginning to take shape?

These questions impel us to see if we can detect motivational *indicators* imbedded in « I don't know », hoping that from these we might get an idea of information-state. This in turn would permit us to react to individual « I don't know » answers with more discrimination.

Reverting to the Group I answers :

●1 I don't know. ●2 I don't know.	Curt. No evidence of interest. Possibly none of the terms in the statement/question connect with any information unit.
●3 I really haven't the slightest idea.	*Almost explicit disinterest*, plus awareness of distaste for the system itself. There is a possibility that the student has *some* information but prefers to dismiss it, for the sake of being expressive. In any case, we have to take him at his word.

In the face of zero motivation implying a near-zero informational substrate, we have two choices :

We could say « All right, let's talk about something else », and go to another part of the program — trying to find something which the student knows enough about to get off to a fair learning start. Later, he might become interested and knowledgeable enough in « microphotography », for example, to allow us to return him to the *A-Frame* on a better footing. (This faculty of letting the student influence his own learning path is of course one of the most promising features of CAI technology).

We could start building, bit by bit, the necessary collection of information units by literally imposing them on the student — a difficult and thankless task, and one which promises no early surge of motivation on his part.

In this particular study we attempted a modification of the second tactic in order to be in a position to observe second-pass performance later on. We tried to pinpoint critical information units which are necessary in dealing with the question, i.e., characteristics of microform types. Then we pointed out our awareness of the difficulty of answering the question without these units. Finally we presented a tactful offer of assistance.

> « I realize that it is almost impossible for you to answer without knowing something about the types of microforms mentioned, and about the factors involved in dissemination of technical literature. I'd like to help you tackle the problem from the beginning by supplying the information you need. Are you willing to work with me toward a correct solution ? »

Second-pass reaction to a « yes » from the student would be : « Which item would you like me to describe first ? Type « Describe — ». Second pass reaction to a « no » from the student would be a signoff, with a consultation recommended.

Turning to the answers in Group II :

◆ 7 I don't know enough to decide. ◆ 8 I don't know what these are exactly — so can't tell.	Polite request implies some willingness, as there may be a few scraps of information upon which to build.

Rather than trying to ascertain the areas of complete ignorance, the first move was to ascertain and strengthen the areas of knowledge, then to fill in the gaps. The following text was aimed at accomplishing this :

> « Well, suppose we start by examining the items you may already have heard about. I may be able to add some useful information about them. How about microfiche ? Microcard ? Aperture card ? The problem of dissemination of technical literature ? Are you acquainted with any of these ? »

Second-pass reaction to « Yes » would be : « Which ? » Second-pass reaction to « No » would be to step down to the next given for plain « I don't know » answers. Second-pass reaction to a specific would be to branch to a satellite. Third-pass reaction to another « I don't know » would be something like this :

> « Shall we take them up one at a time ? Suppose we start with the problem of dissemination of technical literature ».

This would be followed by at least four of the satellite subroutines.

To continue with Group II :

● 1 I don't know. They all seem about equivalent to me. ● 4 I can't honestly compare because I am not familiar with all 3 of the media.	Here the student is clearly making an effort of some kind. He may already have a fair idea of the dissemination problem, since his response shows a narrowing to the three forms suggested.

In this case we are justified in concentrating initially on a definition of the three types.

A-PHASE PERFORMANCE WITH OTHER TYPES OF ANSWER

In the remainder of this section are listed the other answers, and an indication of how the program handled them. In order to save space at this point, we simply refer opposite each to the Appendix D code number which defines the reaction that would have occurred. An assessment as to whether or not that reaction would have been appropriate appears in the right-hand column.

Group ●	Answer ●	Student input	Appendix D channel	Appropriate 1st pass ?
IV	6	I don't know what an aperture card is. Nor (1) or (2).	8.a	Yes
IV	4 (a)	I can't honestly compare because I am not familiar with all 3 of the media.	7.d	No

---

(a) Repeated here for statistical purposes. (The program would have interpreted the input as meaning « I don't know what an aperture card is ». The outcome might have been satisfactory in this case, but no credit can be taken).

15

Group #	Answer #	Student input	Appendix D channel	Appropriate (to pass?)
IV	12	Please define opaque microcard and aperture card.	8.a	Yes
V	13	I believe the opaque microcard is the most useful.	6.a	Yes
V	14	Transparent film sheet; just seems easy to store and use.	2.a	No (b)
V	15	Aperture card too awkward for a big file, easier to enlarge microfiche for convenient viewing.	6.b	No (c)
VI	16	None, I believe in hard copy. I dislike sitting in dark rooms and looking at idiot boxes.	10.a	Yes
V	17	I think the microfiche would be best because I think it can contain more info than the other forms.	2.a	No (d)
IV	18	3. The aperture card can be handled mechanically.	6.b	No (e)
IV	19	Aperture card, because the citation info (etc) is readable without resorting to a reader.	6.b	No (f)
IV	20	3. Aperture cards because they are processed easily.	6.b	No (g)

(b) Should have gone to [illegible] «Store» was overlooked in the user specification.
(c) Program fault. [illegible]
(d) Should have gone to [illegible] was overlooked in the user specification.
(e) «Why?» will be [illegible] for the sense of machine handling and processing is required.
(f) «Why?» will be [illegible] for the sense of [illegible] is needed in any case, and perhaps [illegible] should be one of the specified keywords, although [illegible]
(g) Same as (e).

Group #	Answer #	Student input	Appendix D classed	Appropriate 1st pass?
IV	21	The opaque microcard is adequate.	6.a	Yes
IV	22	The microfiche offers better reproduction (visually) than the microcard.	3.a	No (1)
IV	23	I would suggest the microfiche, since complete information can be stored in a small space.	3.b.2	Yes
IV	24	#3 is most suitable. As a positive copy of the text it is least objectionable to the user.	3.a	No (2)
IV	25	The microfiche has proved quite useful for cartographic information.	3.a	Yes (3)

---

(1) The answer itself is ambiguous, but suggests the need for more covering (1) manual copying, (2) rendering into hard copy, and (3) clarity of display in a reading machine.
(2) A tree is needed to dispose of the positive-negative issue, if possible, followed by a return to other considerations.
(3) « Cartographic » is too far out to provide for at present. One can only hope that the « Why? » will elicit something which the system can process more meaningfully.

EVALUATION AND REVISION OF THE A-FRAME

Appendix F shows in tabular form the characteristics of each of the « A » answers; how it fared in the « A-Frame »; and an evaluation of the A-Frame as to each, on a scale of 1-10. The summary of this data leads to one conclusion, namely, that *although the percentage of matches on the first pass was high (91 %), frame performance as a whole was not commensurately good, since program reactions were suitable in only about half of the cases.* Accordingly we were obliged to evaluate the frame as a whole at less than 50 %.

Let us examine this more closely. The A-Frame was planned and written by an experienced CAI programmer, and his work was checked and emended by a second person, also experienced in the field. It is not surprising that between them they should have foreseen a range of keywords such that 24 out of the 27 answers were intercepted. But they failed to anticipate many of the secondary elements which were needed to refine the meanings of the answers. For example, every response containing a primary element : *microfiche, microcard,* or *aperture card,* was identified as such, but further processing did not occur, because of various omissions and other faults in dealing with such things as « mechanical » and « info ».

This in itself was not unexpected. The original purpose of the test was to see how much of an improvement could be made in the frame, using ideas suggested by operational experience. Admitting that no one person nor even two persons in collaboration could imagine the whole scope and variety of possible responses to a fairly open question, we wanted to gauge the direct utility of student responses in augmenting the range of our perceptions in this regard. We might even decide that the best way to design a frame was to enter only the barest structure, without trying to cover every eventuality, and to rely on an influx of on-line responses from live students to point the way to the frame's further development.

But the experience with « I don't know » answers raised another problem. It was not that the program reactions were particularly bad. They just weren't particularly good. They made no account of attitudinal overtones which to a human teacher would have clearly indicated shades of knowledge-condition in the student. The effort to improve this situation needs to be considered apart from the simple refinements mentioned in the preceding paragraph, because, as indicated in the discussion of cognitive states, we believe that such differentiations might prove generally useful as tools in CAI methodology.

In order to investigate this, all the words and phrases which might be expected to have key status in a « I don't know » statement were listed. Items were clustered in various ways, and the clusters (of which there were finally ten) were mapped into each other on a trial and error basis until it was possible to discern roughly three levels of attitude. These combinations were then assigned programmatically, yielding an array of scans we call the « M-series », set forth on page 276, Appendix G.

Taking the scan labelled « MO » (motivation zero) as an example, we see that it is composed of elements from the scan labelled « A2 », *or* from scans « A2 » *plus* « B2 » *plus* « C2 ». Any answer which had not been screened out by an earlier scan would thus be matched by « MO » if it contained any of the following :

... don't know...
... can't say...
... can't imagine...
... you expect...
... you think...
... at me...
... with it...
... search me...

or a combination of the following :

... don't have...
... not have...
... haven't...
... expect have...
... think have...

plus

... least...
... vague...
... vaguest...
... slightest...
... fuzzy...
... fuzziest...
... foggy...
... foggiest...
... remote...
... remotest...

plus

... idea...
... notion...
... interest...
... concept...
... conception...
... inkling...

Thus

« What makes you think I could possibly answer that ? »
« Search me ! »
« I'm sure I don't know ».
« I haven't the foggiest notion ».

would all be matched in « NKD » and be scored accordingly.

The « M-factor » of scans would not need to bulk as large in the program as might be supposed from the foregoing, because of the common device of forgiving parts of words which may be missing or misspelled. For example the form FOGG* (PILOT) or 'FOGG' (COURSEWRITER) accepts « foggy », « foggiest », « foggier », and « fogged ». A third language, PERL (11), forgives a specified percentage of characters : FOGGIEST (20 %).

The adoption of an additional line of inquiry did not seem to prejudice the original idea of the model, because it is possible to assess performance according to A_1 groups individually or in combination. Thus in the *A-Frame* the following breakdown can be made :

	Score	Possible	%
Groups I and II (« I don't know »)	5 1/2	8	69
Groups III, IV, & V (all others)	6 1/2	17	38
Composite	12	25	48

The *A-Frame's* superficial success with Group I and II rests solely on the fact that forms of « I don't know » can be exhaustively predicted, compared with all the other things that can be said by a student, and a response that makes some sense can be carried out. The M-series of scans represents a new objective, the hope that we could significantly refine this ongoing sense.

---

(11) [illegible], J. C., « PERL — a file-oriented interpretive language » in *Proceedings of the 23rd National Conference of the Association for Computing Machinery* (ACM Publication P-68, Princeton, Brandon, 1968), pp. 22-28. See also in the same publication the review of CAI languages by Karl Zinn, « Programming conversational use of computers for instruction » (pp. 85-92).

As for Groups III, IV, and V, we could continue to pursue the general issue of improving scan specifications word by word, so as to catch and channel a greater variety of unique responses. In some cases it would be necessary to write separate new scan statements and program reactions to deal with aspects we had completely missed in the first version, such as the idea of mechanical handling.

Part II

Procedure

Appendix G (Flow Chart) and *Appendix H* (Program) show the model as revised and redesignated the « B-Frame ».

Very little was done to alter the flow, except to insert the M-series of scans just ahead of « PROMPT + GUESS », and to add a satellite to deal with mechanical handling. The A-Frame flowchart omitted certain controls specified in the program, and the B-Frame does the same.

Appendix I corresponds with *Appendix D*, in specifying exactly what would happen to an identifiable type of input matched by a particular scan statement.

All this work was completed before we allowed ourselves to look at the « B » set of answers. When we had everything ready, we proceeded to drop them one by one into our paper « hopper ». It may be asked why we didn't actually put the program in the computer and test it on-line, in order to avoid any possibility of shading the results. We would have liked to do this, of course, but as mentioned in the beginning we had assumed an augmentation of an existing language (PILOT) with features of one which was not yet operational (DISCUS). In other words, we were using a non-existent CAI language. More recently, DISCUS has indeed been implemented at the University of California Berkeley and UCLA campuses, and we expect to use it for most of our CAI programming.

Anyone monitoring the project might have objected to the fact that we did not seem to require an absolute fit of some input terms with the scan specifications, as originally laid down in Appendix C and Appendix H. The reason for this is that we assumed the « forgive » convention whereby « stor* », for example, would match « storing », « storage », or « storeds», but wrote one of these out for better understanding by the reader. This is obviously misleading, though, so we revised these two Appendices to show such a specification as « *storage* » with only the underlined characters representing the absolute requirement. Thus a reader can perceive both the real specification and the term idea behind it. Except for this reformatting, no retrospective changes of any consequence were made in any of the supporting documents.

Comparison of Results

The summaries of A-Frame and B-Frame observations are compared in Table 1. Clearly a remarkable improvement took place in respect to what we call « sense score », i.e., the percentage of student answers to which the program would have responded satisfactorily.

A satisfactory response in every case is deemed to be one which not only makes sense on the first pass but offers a good chance of leading to a sensible response on the next pass. (This rules out the plausible but misleading response of « Why? » to questions A-18 and A-19 (see page 231) where the student is talking about one thing and the program is talking about another).

In these assessments the student viewpoint controls; we cannot excuse awkward — « noncommunicating » — responses on grounds that they suit our pedagogical plan or that they will lead in the end to some kind of complete exposition.

Before looking into the significance of the results, we need to ask if enough similarity existed between the A set of answers and the B set of answers to validate a comparison of A-Frame performance and B-Frame performance. I think we can say that the motivation scores and the proportions of Group V answers show that the two sets were quite alike — certainly close enough for our purposes.

Table 1

COMPARISON OF A-FRAME AND B-FRAME PERFORMANCE
ON SIMILAR SETS OF ANSWERS

	A-Frame	B-Frame	Change
Match score	24 (96 %)	25 (100 %)	+ 4 %
Issue score			
Groups I & II	5 1/2 / 8 (69 %)	5 1/2 / 6 (91 %)	+22 %
Groups III, IV, V, & VI	6 1/2 / 17 (38 %)	16 1/2 / 19 (86 %)	+48 %
Composite	12/25 (48 %)	22/25 (88 %)	+40 %
Characteristics of the sets :			
Motivation 0	4 × 0 = 0	2 × 0 = 0	—
Motivation 1	4 × 1 = 4	6 × 1 = 6	+2
Motivation 2	3 × 2 = 6	3 × 2 = 6	—
Motivation 3	14 × 3 = 42	14 × 3 = 42	—
Composite	52	54	+2
Possible maximum	75	75	—
Factor d	52/75	54/75	+2/75
Answer Type Groupings :			
I	3	1	−2
II	5	5	—
III	1	0	−1
IV	3	6	+3
V	12	13	+1
VI	1	0	−1
	25	25	—

SIGNIFICANCE

The total number of unique A_k which might be entered in response to a given question is a function of the openness of

25

that question, and can range from a very small set (as in response to a True-False) to one which is very large (as in response to « What's it all about ? »). Let us call this number K and characterize it as finite (because of the constraint of our A_k definition) but indeterminate (because no matter how many different legal answers we can imagine in response to a question, someone may come along with one we had not thought of).

If we were to scan randomly for A_k the curve of match probability would be a straight line as shown in Figure 1. But we do not scan randomly, because we know that the frequency of occurrence of some A_k is far greater than that of others, and that it is possible to attain a better match probability for K scans by tailoring them to the more frequent A_k. The uppermost curve (line 4) represents the cumulative frequency of occurrence of A_k and at the same time serves to represent the match probability (P) which a CAI programmer could obtain for N scans *if* he knew the makeup of the items to the left of N.

But of course he doesn't know this. He can only guess, on the basis of his perception of (1) the topic, (2) the student set, (3) the position of the question in context, and (4) the language in use, which A_k will occur more frequently than others, and how much more frequently. The richer these variables, the harder it will be for him to predict not only the identity of the A_k to the left of N but the shape of the curve of their frequency. Line 2 shows how his prediction will always be better than random but less than perfect.

Line 3 represents a closer approach to Line 4, attained by virtue of revising and improving upon the original, highly subjective, work of the programmer. What is the most efficient way of doing this ? By bolstering his predictions with external data furnished him by the system in the course of its operations.

We would like to get a better idea of the role of this external data (feedback) — what does it look like ? how can it best be categorized ? how many iterations should be considered before the utility of the process is overshadowed by the tasks associated with it ? These questions have a direct bearing on the refinement of conversational CAI techniques.

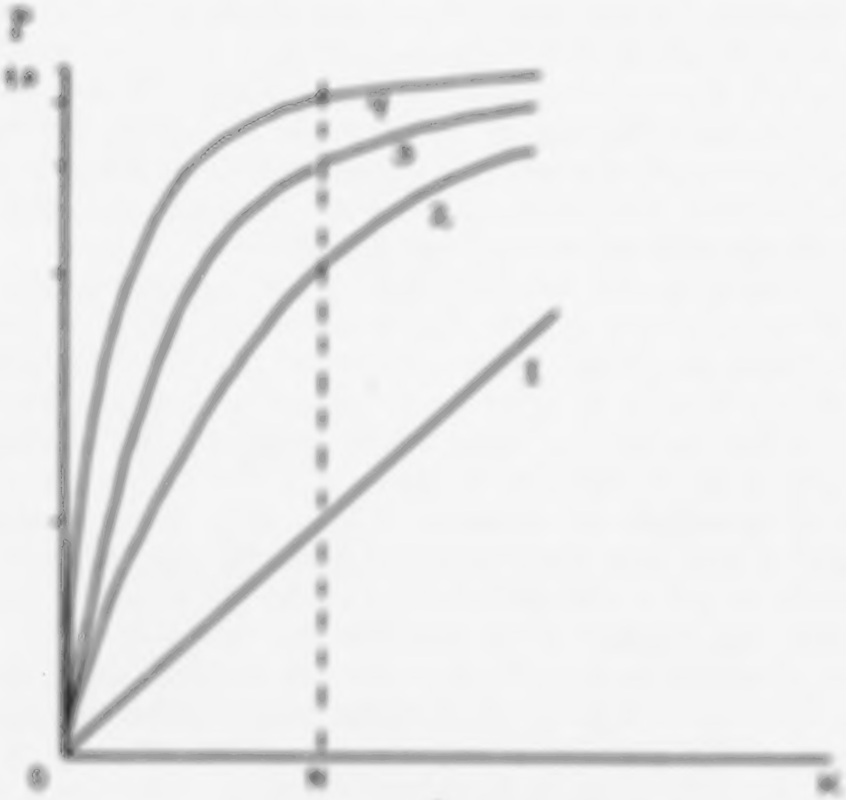

Fig. 1

We are still a long way from being able to scale curves 2, 3, or 4, for even one set of variables, but at least the results obtained from this study indicate that

(i) for an open question with a large K and an adult, heterogeneous student set, a striking improvement in meaningful intercept can be obtained through close analysis of a modest number of live responses, and
(ii) as a corollary, the rate of improvement to be derived from close analysis beyond this modest number must decline quite rapidly.

It is only fair to ask how much of the improvement in meaningful intercept (which is a better measure than raw match probability) should be credited to the M-series of scans, representing a completely new conceptual element in the B-Frame. Looking back to the evaluations given for responses to Group I and Group II answers in the A-set, it will be seen that none of them was downgraded for failure to detect nuances of « I don't know », but only for mechanistic faults. Thus the conditions determining sense score are the same for both frames.

ACKNOWLEDGEMENTS

Our thanks to Miss Helen Yen, ILR staff, for gathering « student » input for our model frame, and to the fifty individuals who contributed to the sample.

APPENDIX A

FORMS

1. *Attachment* (1) is the form of answer sheet used by all fifty « students ».
2. *Attachment* (2) is the form used by the authors for analysis of student responses and program reactions.

Attachment (1)

From : J. C. Meredith, Institute of Library Research
(Information Processing Laboratory Project)

You are asked to participate in a survey of response patterns to a single statement/question typical of programmed instruction, as follows :

> There are three basic types of unit microform.
>
> These are :
> 1. The transparent film sheet, or microfiche.
> 2. The opaque microcard™.
> 3. The aperture card.
>
> Which of these do you think is most suitable for dissemination of technical literature ? Why ?

(Assume that the program is capable of dealing with responses consisting of symbols, numerals, or English words, singly or in combination, up to two lines in length. Your response may be in the form of a statement or a question or both, but should at least be relevant. Try to decide on your answer quickly.)

Response : ____________________

____

Thank you. Please check the appropriate box(es) :

☐ I.S
☐ II.R
☐ Other

Attachment (1)

STUDENT ANSWER

PROGRAM RESPONSE

1. First pass
2. Likely 2nd pass

SATISFACTORY ?

TYPE OF MODIFICATION INDICATED

REVISED PROGRAM ELEMENT

APPENDIX B

« A-FRAME » FLOWCHART

1. Attached.

2. The chart represents in abbreviated form the decision sequences envisaged for the « A-Frame ». The following notes pertain :

1) The « Q » entry (large circle) represents student input, terminating with a « send » signal which causes the computer to resume processing.
2) « Q » returns (small circles) imply a textual display of some kind, generated according to the specifications laid down in the program itself, and held on the CRT while the computer is waiting for the next input. Consult Appendix D to ascertain actual text planned for use in various situations.
3) « OUT » (small circles) signifies exit to the next frame.
4) To avoid excessive complication of the flowchart, several tests (diamonds) have been omitted. For example, the first five major

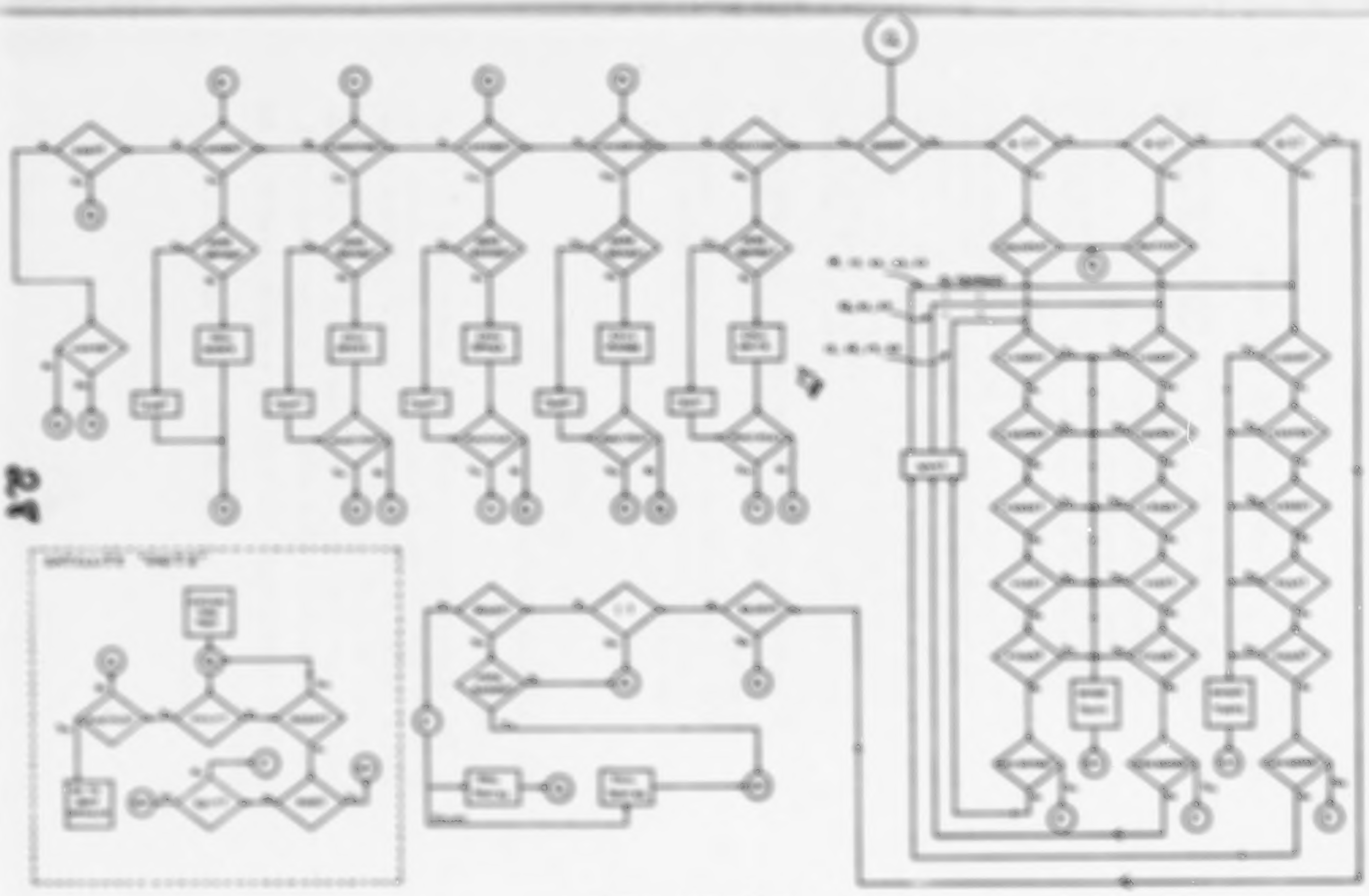

A-Frame Flowchart

tests to the left of the « DUNNO » diamond entail additional subordinate tests and decisions associated with successive scans of the same input string, under a series of « nested » scan parameters. These are omitted from the diagram.

c) The group of operations to the left of « DUNNO » is devoted to provision of information intended to help the student solve the problem. One of five information « satellites » — UNITZ — is shown in the large box. It should be visualized as occupying the action box marked « CALL UNITZ » (here).

d) The group of operations to the right of « DUNNO » is designed to accommodate a student's attempt to make the right choice. Each choice and the *first* recognized valid reason, or a combination (not shown) of the two or three best reasons, call forth a unique block of text. Note that if the student fails to give a recognized reason, the program loops through to a display of « Why ? » to Q, and his second response is scanned without requiring him to repeat his choice. (This is another case where the diagram omits specific tests).

e) The remaining operations (bottom center) are miscellaneous tests and utility operations, ending with two fail-match displays terminating the frame.

f) The typed numerals refer to answers in the « A » set, located so as to show how they would have been scored in a first pass through the program.

APPENDIX C

The « A-Frame » Program

1. Attached.

2. The program listing resembles actual source input in a high-level CAI programming language (selected string match type), such as PILOT. We have, however, omitted all delimiters (which serve only to notify the compiler whether it is dealing with a label, an operation code, or an operand) and have stylized the scan specification in logical form (e.g., a comma means « or »).

3. The following notes will assist the reader in interpreting the program :

a) All operations are sequential from left to right and from top to bottom.

b) For purposes of this sample, « G » signifies a display occurring only if a preceding scan specification has been successfully matched. « F » signifies a display occurring only if all match attempts have failed; and « T » signifies a display occurring regardless of match condition if execution reaches that point.

c) Reference to a label in quotes means that everything in the operand so labelled is to be inserted at that point. The expanded versions of all labelled alphabetic strings are listed toward the end of the program.

d) The control statements in the right hand column would in many cases be constrained to operate only under a « match » condition, the same as a « G » textual display. The necessary qualifiers for this have been omitted for the sake of simplicity.

e) Control statements ADD, TALLY, and MARK mean « add », « add one », and « ensure one and one only in » respectively. They affect the contents of numerical counters whose existence is established implicitly rather than by formal definition.

f) The sequence in which various match attempts are made reflects the rule that normally scans terminate immediately on successful match — the remainder of student input is ignored. This favors putting the longer, more difficult specifications ahead of those which are easier to satisfy. For example, the scan for « ! » is placed at the very end, so that it will not capture emphatic statements which contain sought-for elements specified in other scans.

g) Many of the planned unique text displays are so similar in structure that they can be assumed. For example the response to « I like microfiche because it's convenient » would call forth exactly the same *kind* of text as « I like microfiche because it's cheap ». To avoid needless repetition, many of these have been omitted from the listing.

h) A sample satellite is shown on the last two sheets of the program. The other four satellites would resemble it very closely. It might even be feasible to use just one satellite with a choice of texts to be « USED » depending on which indicators (variables such as MICROY) had been activated.

• A • Source Program

Labels	Code	Display text and input text specifications	Control statements
EXPO	T	(Initial statement and question)	
MICRO-A	A	(student input)	
	B	«[illegible]», (CLASSF1) = (UNIT, UNITIZED)	TALLY (UNITY, PROBY), IF UNITY ≥ 2 ADD UNITS TO DRIPY
	B	«[illegible]», (CLASSF1) = (TRANSPARENT, FILM SHEET, FICHE, MICROFICHE, «[illegible]»	TALLY (MICROY, PROBY), IF MICROY ≥ 2 ADD MICROS TO DRIPY
	B	«[illegible]», (CLASSF1) = (OPAQUE, MICROCARD, «[illegible]»	TALLY (OPAQY, PROBY), IF OPAQY ≥ 2 ADD OPAQS TO DRIPY
	B	«[illegible]», (CLASSF1) = (APERTURE, «[illegible]»	TALLY (APERY, PROBY), IF APERY ≥ 2 ADD APERS TO DRIPY
			IF (UNITY, MICROY, OPAQY, INNERY) ≥ 2 USE DRIP, ADD «UNITS» TO PROB UNITY, ADD «MICROS» TO PROB ON MICROY, ADD «OPAQS» TO PROB ON OPAQY, ADD «INNERS» TO PROB ON INNERY
	Q	I UNDERSTAND YOU NEED MORE INFORMATION ABOUT «PROB»	IF PROBY ≥ 2 USE TABLE [illegible], CALL UNITS ON UNITY, CALL MICROS ON MICROY, CALL OPAQS ON OPAQY, CALL APERS ON APERY, CALL INNERS ON INNERY, JUMP TO MICRO-A

Labels	Code	Display text and input text specifications	Control statements
	R	+DUNNO+ + ANY	
	G	ONE OF THEM IS SUPERIOR IN REPRODUCIBILITY, COST, GENERAL USE, ETC. DO YOU NEED MORE INFORMATION? IF SO, TYPE +CLARIFY ________+	JUMP TO MICRO.A
	R	+DUNNO+ + +CARD+	
	G	I DON'T UNDERSTAND EXACTLY WHAT YOU NEED TO HAVE CLARIFIED.	MARK CLARA, JUMP MICRO.A
	R	+DUNNO+, NOT COMPETENT, INCOMPETENT, NEED INFORMATION, REQUIRE INFORMATION	
	G	I'LL BE GLAD TO EXPLAIN ANY OF THE TERMS I'VE USED, IF YOU WISH. JUST TYPE +CLARIFY ________+	MARK CLARA, JUMP MICRO.A
	R	+FI.E+ + +FLOCAP+ + +FLOCAP+ + +FI.E+	
MICRO.CAP	G	YOU ARE CORRECT IN PICKING MICROFICHE, BUT THE REASON IT IS SUPERIOR FOR THE DISSEMINATION OF TECHNICAL LITERATURE IS NOT THAT IT HAS GREATER CAPACITY (WHICH DEPENDS ON THE REDUCTION RATIO USED) BUT ON THE FACT THAT +PICKUP+	JUMP TO NEXTFRAME
	R	+FI.E+ + +[illegible]+ + +[illegible]+	
[illegible]	G	GOOD. YOU CORRECTLY PICKED TWO OF THE IMPORTANT ADVANTAGES OF FICHE. +PICKUP+	JUMP TO NEXTFRAME
[illegible]	G	YOU ARE CORRECT IN PICKING MICROFICHE, AND EASE OF DISTRIBUTION IS ONE OF ITS COMPELLING ADVANTAGES. +PICKUP+	JUMP TO NEXTFRAME

Labels	Code	Display text and input text specifications	Control statements
	B	«%1» «[illegible]», «[illegible]» «%1»	
MICROCHEAP	G	YOU ARE CORRECT IN PICKING MICROFICHE, AND COST CONSIDERATIONS CERTAINLY ENTER INTO THE PICTURE. «PERHAPS»	JUMP TO [illegible]
	B	«%1» «[illegible]», «[illegible]» «%1»	
	G	CAN YOU COMPARE THEM MORE ON THE BASIS OF INFORMATION? IF YOU WOULD LIKE TO KNOW MORE ABOUT THE OTHER FORMS, OR ABOUT THE GENERAL REQUIREMENTS FOR DISSEMINATION OF TECHNICAL LITERATURE, JUST TYPE «CLARIFY ______»	JUMP TO [illegible]
		(repeat entries for «%2» and «%3»)	
	B	REJECT, HATE, DISLIKE, «NEGAT» LIKE	
	G	ASIDE FROM YOUR PERSONAL FEELINGS IN THE MATTER, CAN YOU EXPRESS AN OPINION AS TO WHICH MIGHT BE LESS SUITABLE FOR THE STATED PURPOSE?	JUMP TO [illegible]
	B	«NEGAT» EXPERIENCE	
	G	I'D LIKE YOU TO OPINE ON THE BASIS OF AVAILABLE INFORMATION, IF POSSIBLE. PLEASE TYPE «CLARIFY ______» FOR EXPLANATION OF INDIVIDUAL ELEMENTS.	JUMP TO [illegible]
	B	«NEGAT»	TALLY HOPELESS, IF HOPELESS = 3 JUMP CHANGE
	G	PLEASE SIGN OFF NOW	JUMP TO END

Labels	Code	Display text and input text specifications	Control statements
CHANCE	G	WOULD YOU LIKE MORE INFORMATION? IF SO, PLEASE INDICATE BY TYPING «CLARIFY ________ » (WHICHEVER TERM BOTHERS YOU).	JUMP TO MICRO1.A
	R	«N.1» + «N.2» + «N.3» (any 2, any order)	
	R	ALL, ANY	
	G	SEE IF YOU CAN PICK JUST ONE, ON THE BASIS OF WHAT YOU CAN LEARN FROM ME ON THE SUBJECT.	JUMP TO MICRO1.A
	R	«N.1»	
	G	WHY?	TALLY (ANSW, MICRO), JUMP TO MICRO1.A
	R	«N.2»	
	G	WHY?	TALLY (ANSW, OPAQ), JUMP TO MICRO1.A
	R	«N.3»	
	G	WHY?	TALLY (ANSW, APER), JUMP TO MICRO1.A
	R	«FLUSCAP»	IF MICRO JUMP MICROCAP, IF OPAQ JUMP OPAQCAP, IF APER JUMP APERCAP
	R	«FLUSCLAR»	IF MICRO JUMP MICROCLAR, IF OPAQ JUMP OPAQCLAR, IF APER JUMP APERCLAR

Labels	Code	Display text and input scan specifications	Control statements
	R	I	
	G	REALLY? I'M SURPRISED YOU FEEL SO STRONGLY ABOUT IT. IF YOU'D LIKE CLARIFICATION OF ANY ELEMENT OF THE STATEMENT ABOUT UNIT MICROFORMS, OR OF THE QUESTION, JUST ASK. OTHERWISE PLEASE SIGN OFF AND NOTIFY THE LAB ASSISTANT	JUMP TO MICRO.A
	F	HOW'S THAT AGAIN? I DON'T UNDERSTAND YOUR RESPONSE AS WORDED.	JUMP TO MICRO.A
	F	WELL, I'M LICKED. GOODBY.	JUMP TO END
(Note : The following are the expanded version of the strings referred to by quoted labels)			
UNITE	T	UNIT OR *UNITIZED MICROFORMS*	
MICROE	T	*TRANSPARENT FILM SHEET*, OR *MICROFICHE* —	
OPAQE	T	*OPAQUE MICROCARD*	
APERE	T	*APERTURE CARDS* —	
DISSEE	T	DISSEMINATION OF TECHNICAL LITERATURE —	
DUNNO	T	DON'T KNOW, HAVEN'T, LEAST, SLIGHTEST, LOST, OUT OF IT, SEARCH, CONFUSED, CAN'T DECIDE, CAN'T CHOOSE, CAN'T CHOICE, CAN'T SAY, N/VE NEVER, (etc.)	
GARB	T	(alphabet)	

Labels	Code	Display text and input scan specifications	Control statements
DUP		I BELIEVE YOU ALREADY MENTIONED YOUR PROBLEM WITH «DUPY» AND I TRIED TO EXPLAIN. IF YOU ARE STILL AT A LOSS, PERHAPS YOU SHOULD SIGN OFF AND SEEK HELP.	
TAKUP	T	WE WILL TAKE THEM UP IN THAT ORDER.	
POSIT	T	*(Forms of affirmative)*, MORE MOST	
NEGAT	T	*(Forms of negative)*, LEAST, LESS	
RPT	T	HERE IS THE ORIGINAL QUESTION AGAIN : «EXPO»	
PLUSCAP	T	*CAPACITY, NUMBER*, VOLUME, SPACE, *CONTAIN*, HOLD	
PLUSCLAR	T	CLARITY, CLEAR, FINE, *FINENESS, VIEWING*, RESOLUTION	
NEGCLAR	T	HARD TO READ, POOR RESOLUTION, DIM, DARK, HURTS EYES, PRINT TOO SMALL, FUZZY	
PLUSEASE	T	EASE OF *DISTRIBUTION*, EASE OF *MAILING*, EASE OF SENDING	
PLUSEXPERIENCE	T	EXPERIENCE IN USE, KNOW MORE ABOUT	
NEGNOTES	T	HARD NOTES, DIFFICULT NOTES, UNDERLINE, WRITE ON	
PLUSCHEAP	T	COST, CHEAP, INEXPENSIVE, SAVE MONEY	
NEGLOSE	T	TOO SMALL, LOSE, LOST, MISPLACE, MISPLACED, LOOSE TRACK OF	

Labels	Code	Display text and input scan specifications	Control statements
NEGTRUB	T	TOO MUCH TROUBLE, TIME CONSUMING	
FICHEP	T	MICROFICHE CAN BE DUPLICATED VERY READILY AND INEXPENSIVELY, AND IN FACT IS THE STANDARD IN USE BY THE FEDERAL GOVERNMENT FOR DISTRIBUTION OF CLEARINGHOUSE, DOD, NASA, AEC, AND ERIC DOCUMENTS — WHICH INCLUDE A LARGE PORTION OF OUR TECHNICAL LITERATURE OUTPUT. RECIPIENTS CAN READILY USE THEM IN A WIDE VARIETY OF READERS, OR (UNLIKE OPAQUE CARDS) RENDER THEM BACK INTO EYE-LEGIBLE FORM THROUGH READER/PRINTERS. WITH APERTURE CARDS SEVERAL UNITS ARE REQUIRED TO CONVEY A MULTI-PAGE DOCUMENT, HENCE THEY ARE MORE SUITABLE FOR SINGLE ITEMS, SUCH AS ENGINEERING DRAWINGS. (APERTURE CARDS ARE MORE OFTEN USED IN A MECHANIZED SYSTEM BUT THIS IN ITSELF DOES NOT MAKE THEM LESS SUITABLE THAN FICHE, OR MORE SO.)	
N.1	T	1, ONE, FIRST, MICROFICHE, TRANSPARENT, FILM SHEET	
N.2	T	2, TWO, SECOND, OPAQUE, MICROCARD	
N.3	T	3, THIRD, LAST, APERTURE	
(Note : The following is a typical « [illegible] » frame, callable at any point).			
UNITE	T	A UNIT MICROFORM IS ONE WHICH CONTAINS A SINGLE DOCUMENT, UNLIKE ROLL MICROFORM (MICROFILM) WHICH MAY CONTAIN SEVERAL DOCUMENTS ON ONE ROLL, OR REEL. EACH UNIT MAY BE LABELLED, INDEXED, STORED, COPIED,	

Labels	Code	Display text and input scan specifications	Control statements
		OR TRANSFERRED TO A USER INDEPENDENTLY OF ANY OTHER DOCUMENT. SO UNIT MICROFORM IS SPECIALLY WELL SUITED FOR DISSEMINATION OF TECHNICAL LITERATURE WHICH IS USUALLY PUBLISHED IN THE FORM OF JOURNAL ARTICLES OR DOCUMENTS OF SIMILAR LENGTH. (USUALLY SEPARATE DOCUMENTS). DOES THIS EXPLAIN THE TERM ADEQUATELY FOR YOU?	ADD .5 TO PROBY, ADD .05 TO UNITY
UNIT.A	A	(student input)	
	B	« POSIT »	IF PROBY JUMP TO MOREDUN
	G	FINE. IF YOU ARE IN DOUBT ABOUT ANY OF THE OTHER TERMS, DON'T HESITATE TO ASK. « EFT »	JUMP RETURN
MOREDUN	G	IN THAT CASE WE WILL PASS TO THE MEANING OF	IF MICROY = 1 USE MICRON, IF MICROY JUMP RETURN, IF OPAQY = 1 USE OPAQN, IF OPAQY JUMP RETURN, IF APERY = 1 USE APERN, IF APERY JUMP RETURN IF [illegible] = 1 USE [illegible], IF [illegible] JUMP RETURN
	B	« NEGAT »	
	G	RATHER THAN SPEND MORE CAI TIME ON IT NOW, I SUGGEST THAT YOU EITHER SIGN OFF AND SEEK OUT AN INSTRUCTOR, OR TYPE « PASS » AND I WILL GO ON TO THE NEXT QUESTION.	JUMP TO UNIT.A

Labels	Code	Display text and input text specifications	Control statements
	R	PASS	
	G	ALL RIGHT, BUT PLEASE GET CLARIFICATION AT THE FIRST OPPORTUNITY.	JUMP TO NEXTFRAME
	R	SIGN OFF, QUIT	
	G	YOU ARE NOW SIGNED OFF	JUMP TO END
	F	BEG PARDON?	JUMP TO UNIT.A
RETOUR	E	(terminates call, returns to point whence it came).	
NEXTFRAME END			

APPENDIX D

Reacting Text Display — « A-Frame »

1. List attached.

2. This Appendix lists the textual responses programmed in the « A-Frame », that is, the responses which are called forth from the computer as part of its reaction to student input. Roman numerals indicate « pass status » as follows :

I. Responses which can occur on the first pass (i.e., in answer to a student's first input), or on subsequent passes.

II. Responses which can occur only on the second or subsequent passes (depending on certain conditions being set in an earlier pass).

III. Responses occurring on the second or subsequent pass *if* a satellite has been called.

All student answers are classified $A_{L,P,M}$ (legal, perceived, matched) except numbers 12, 27, 28, and 31, which are F (failed), being either A_I (illegal), $A_{L,U}$ (legal but unperceived), or $A_{L,PF}$ (legal, perceived, but intentionally failed).

3. *Types of student answers are indicative only.* For example, each type or subtype listed represents hundreds or even thousands of different inputs all containing a required key element. For the exact specification of these elements, consult Appendix C. The designations « Right » and « Wrong » indicate the instructor's viewpoint and have no mechanistic significance in the program.

4. For the sake of brevity, many unique responses are left to the reader's imagination, in situations where they would require only slight rewording of a response which has been written out.

5. None of the text should be interpreted substantively. We expect an expert in the field might think of many counter-arguments.

We are concerned here with dialogue rather than with factual distinctions, and in regard to the latter defer entirely to copyrighted reference 5.

6. At the end of this Appendix are included two sample dialogues which might occur in an on-line situation, to illustrate the kind of interchange which might take place in the « A-Frame ».

40

I. First pass.

Type of answer (numbers and letters establish categories referred to in *Appendix F*)	Program display reaction (1 E a → a exit to next frame c)
1. Right — both elements	
a. Reason : ease of distribution, of mailing, of sending	You are correct in picking microfiche, and ease of distribution and use is one of its compelling advantages. (see FICHUP text) FICHUP : Microfiche can be duplicated very readily and inexpensively, and in fact is the standard in use by the federal government for distribution of Clearinghouse, DOD, NASA, AEC, and ERIC documents — which include a large portion of our technical literature output. Recipients can readily use them in a wide variety of readers, or (unlike opaque cards) render them back into eye-legible form through reader-printers. With aperture cards, several units are required to convey a multi-page document, hence they are more suitable for single items, such as a file of engineering drawings. (Aperture cards are more often used in a mechanized system, but this in itself does not make them more suitable than fiche, or less suitable). (E)
b. Reason : cost, cheap, inexpensive, save money	You are correct in picking microfiche, and cost considerations certainly enter into the picture. Microfiche can be duplicated very readily and inexpensively (etc. — see FICHUP in 1.a above). (E)

c. Reason : 1.a + 1.b	Good. You correctly picked two of the important advantages of fiche. (FICHUP) (E)
2. Right — first element only	
a. No reason given	Why?
b. Wrong reason given	
(1) experience (+because I've had more experience with it+).	Can you compare them more on the basis of information? If you would like to know more about the other forms, or about the general requirements for dissemination of technical literature, just type +Clarify ———— a.
(2) capacity (+because it has greater capacity+).	You are correct in picking microfiche, but the reason it is superior for dissemination of technical literature is not that it has greater capacity than other unit forms (which depends on the reduction ratio in use) but on the fact that microfiche can be duplicated very readily and inexpensively. (FICHUP) (E)
(3) clarity	(similar to 2.b.1 above) (E)
(4) knowledge (+the only one I know about+).	(similar to 2.b.1 above) (E)
3. Wrong — Two first elements	See if you can pick just one, on the basis of what you can learn from me on the subject.
4. Wrong — wrong first element	
a. Microcard	Why?
b. Aperture card	Why?
5. Wrong — Don't know	
a. Alone	I'll be glad to explain any of the terms I've used, if you wish. Just type +Clarify ———— a.
6. Wrong — Don't know + unidentified element	

a. «Don't know because (—?—)».	I don't understand exactly what you need to have clarified.
7. Wrong — Don't know + single identified	
a. Unit, unitized	(First pass only) I understand you need more information about «unit» or «unitized» microforms. A unit microform is one which… (etc.) Does this resolve your uncertainty concerning the definition of unitized microforms? (Second pass et seq.) I believe you already mentioned your problem with «unit» or «unitized» microforms, and I tried to explain. If you are still confused, perhaps you should sign off and seek help.
b. Transparent, film, sheet, fiche, microfiche	(Similar to 7a)
c. Opaque, microcard	(Similar to 7a)
d. Aperture	(Similar to 7a)
e. Dissemination, technical, literature	(Similar to 7a)
8. Wrong — Don't know + multiple identified	
a. *Any* combination of 7a, 7b, 7c, 7d, and 7e)	I understand you need more information about (7a, 7b, 7c, 7d, 7e). We will take them up in that order. (Stacked subroutines of 7a-e)
9. Wrong — Don't know + general	
a. *Any*	One of them is superior in reproducibility, cost, general use, etc. Do you need more information? If so, type «Clarify ______».

b. No experience	I'd like you to choose on the basis of available information, if possible. Type «Clarify ___» for explanation of individual elements.
10. Wrong — Rejection	
a. Dislike	Aside from your personal feelings in the matter, can you express an opinion as to which might be least unsuitable for the stated purpose?
b. Expletive	Really? I'm surprised you feel so strongly about it. If you'd like clarification of any element of the statement about microforms, or of the question, just ask. Otherwise please sign off and notify the lab assistant.
11. Wrong — Request	
a. Clarify, define	(Same as 7 and 8)
12. Fail	How's that again? I don't understand your response as worded. Please elucidate.

II. Second pass

13. Right — both elements	Not applicable (Items completed on first pass)
14. Right Second Element (first element right)	
a. Reason: ease of distribution, of mailing or sending	(Same as 1.a) (II)
b. Reason: cost, cheap, inexpensive, save money	(Same as 1.b) (II)
c. Reason: 1.a + 1.b	(Same as 1.c) (II)
15. Right Second Element (first element wrong)	
a. Misread 1st element (1) experience	(Similar to 2.b.1, 2.b.2, 2.b.3,

(e) capacity (f) clarity (g) knowledge	and 1.b.4 with special wording) (X)
b. Question used as element	(Same as 13.a) (X)
16. Wrong Second Element (1st element right)	(ditto)
17. Wrong — Don't know.	(Repeat 5)
18. Wrong — Don't know + unidentified	(Repeat 6)
19. Wrong — Don't know +	
a. Single identified	(Similar to 7)
b. Multiple identified	(Similar to 8)
20. Wrong — Don't know + general	(Repeats 9)
21. Wrong — Rejection	
a. Dislike	(Repeats 10.a)
b. Expletive	(Repeats 10.b)
22. Wrong — Request	(Same as 7, 8, and 11)

SUBROUTINE FOLLOWING 7

23. Right	
a. « YES »	Fine. If you are in doubt about any of the other terms, don't hesitate to ask. Here is the original question again. (repeats question)
24. Wrong	
a. « NO »	Rather than spend more CAI time on it now, I suggest that you either sign off and seek out an instructor, or type « Pass » and I will go to the next question. (X)

SUBROUTINE FOLLOWING 8

25. Right	
a. « YES »	In that case we will pass to the meaning of ... (next occurring item of requested information).
26. Wrong	
a. « NO »	(Same as 24).

27. FAIL — If ⊕12 unused on 1st pass	(Same as 12).
28. FAIL — If ⊕12 used on 1st pass	(Use 12 (admits frame failure; may quote all instructive text)).

III. *Third pass*

(Predictable only if a subroutine was used on the 1st or 2nd pass)

SUBROUTINE FOLLOWING 8 and 9

29. Wrong — Continue a. « PASS »	All right. But please get clarification at the first opportunity. (E)
30. Wrong — EXIT a. « I quit »	You are now signed off. (E)

31. FAIL — ⊕27 & ⊕28 used	(Program falls through to next frame) (E)

A SHORT DIALOGUE AS ENVISAGED IN THE « A » VERSION

Instructor	(Statement and question)
Student	I don't know what a microcard is, really.
Instructor	(Defines microcard) Does this resolve your uncertainty concerning the definition of microcards ?
Student	Yes.
Instructor	Fine. If you are in doubt about any of the other terms don't hesitate to ask me. (Repeats statement and question).
Student	Microfiche, because it is cheaper to reproduce and distribute in quantity.
Instructor	You are correct in picking microfiche, and ease of distribution and use is one of its compelling advantages. Microfiche can be duplicated very rapidly and inexpensively — (etc.)

(Exit to next frame)

A LONGER DIALOGUE AS ENVISAGED IN THE « A » VERSION

Instructor	(Statement and question)
Student	I dislike all three.
Instructor	Aside from your personal feelings in the matter, can you express an opinion as to which might be the least unsuitable for the stated purpose ?
Student	How can I ? I don't know much about any of them.
Instructor	One of them is superior in reproducibility, general use, cost, etc. Do you need more information ? If so, type « Clarify ______ ».
Student	O.K. Clarify what is a microcard. Also 3.
Instructor	I understand you need more information about opaque microcard — aperture cards. We will take them up in that order. (Defines microcard) Does this resolve your uncertainty concerning microcards ?
Student	Affirmative
Instructor	In that case we will pass to the meaning of aperture card : (Defines aperture card). Does this resolve your uncertainty concerning aperture cards ?
Student	Yes
Instructor	Fine. If you are in doubt about any of the other terms, don't hesitate to ask. Here is the original question again. (Repeats statement and question).
Student	The whole question seems unreasonable to me.
Instructor	How's that ? I don't understand your response as worded. Please elucidate.
Student	Well, I'll make a guess. Microcards and aperture cards.
Instructor	See if you can pick just one, on the basis of what you can learn from me on the subject.
Student	Microcards.
Instructor	Why ?
Student	Because they're cheaper, I guess.
Instructor	No, as a matter of fact, they are more expensive than either of the others. Microfiche is better for dissemination of technical literature than

either microcard or aperture cards, because — (etc.) — Microfiche can be duplicated — (etc. — FICHUP).

(Exit to next frame).

APPENDIX E

« A » STUDENT ANSWERS AND PROGRAM RESPONSES

This Appendix lists the student answers of the « A » set, together with the reactive text displays which would have been called forth in the « A-Frame ». All items are grouped according to « sense » from the instructor's viewpoint. The several evident inconsistencies are discussed in the body of the paper.

STUDENT INPUT		REACTION TEXT DISPLAY
Group I : No clue		
● 1	I don't know.	I'll be glad to explain any of the terms I've used, if you wish. Just type « Clarify ______ ».
● 2	I don't know.	(same as ● 1)
● 5	I really haven't the slightest idea.	(same as ● 1)
Group II : Polite regret, some narrowing of information need		
● 3	I don't know enough to decide.	I don't understand exactly what you need to have clarified.
● 4	I don't know what these are exactly, so can't tell.	(same as ● 3)
● 7	Don't have enough experience to judge.	I'd like you to choose on the basis of available information, if possible. Type « Clarify ______ » for explanation of individual elements.

STUDENT INPUT		REACTION TEXT DISPLAY
#10	Not enuf info to answer this — would need to know properties of microforms and kinds/quality of avail photocopy.	How's that again ? I don't understand your response as worded. Please elucidate.
#11	I've only had occasion to use the microfilm on reels, so I can't really say.	(same as #1)
Group III : « I don't know » + attempt		
# 5	I don't know. They all seem about equivalent to me.	(same as #2)
Group IV : Specific information need		
# 6	I don't know what an aperture card is. Not (1) or (2)	I understand you need more information about aperture card - microfiche - opaque microcard. We will take them up in that order. Aperture cards are not true unit microforms since they are « assembled », generally from card stock, adhesive, and film. They are well suited to applications such as engineering drawings... (etc.) Does this explain the term adequately for you ?
# 8	I can't honestly compare because I am not familiar with all 3 of the media.	I understand you need more information about aperture cards. Aperture cards are not true unit microforms since they are « assembled »,... (etc.) Does this explain the term adequately for you ?
#12	Please define opaque microcard and aperture card.	I understand you need more information about opaque microcard - aperture card. We will take them up in that

STUDENT INPUT		REACTION TEXT DISPLAY
		order. Microcard is a registered trademark for the form which is also called the « microopaque », and is characterized by ... (etc.) Does this explain the term adequately for you ?
Group V : Solution offered		
● 13	I believe the opaque microcard is most useful.	Why ?
● 14	Transparent film sheet; just seems easy to store and use.	Why ?
● 15	Aperture cards too awkward for a big file, easier to enlarge microfiche for convenient viewing.	Why ?
● 17	I think the microfiche would be best because I think it can contain more info than the other forms.	Why ?
● 18	3. The aperture card can be handled mechanically.	Why ?
● 19	Aperture card, because the citation infro (*sic*) is readable without resorting to a reader.	Why ?
● 20	3. Aperture cards because they are processed by machine easily.	Why ?
● 21	The opaque microcard is adequate.	Why ?
● 22	The microfiche offers better reproduction (visually) than the microcard.	Why ?
● 23	I would suggest the microfiche, since complete information can be stored in a small space.	Why ?

STUDENT INPUT		REACTION TEXT DISPLAY
#24	#2 is most suitable. As a positive copy of the text it is least objectionable to the user.	Why ?
Group VI : Other		
#16	None. I believe in hard copy. I dislike sitting in dark rooms and looking at idiot boxes.	Aside from your personal feelings in the matter, can you express an opinion as to which form might be least unsuitable for the stated purpose ?

APPENDIX F

« A-Frame » performance summary

1. Attached.

2. Explanation of column headings follows :

1) Student answer number	generally in random order, except that when typing the list from the answer forms, « don't know »s were entered first.
2) Student answer	except for line breaks, a literal version in each case.
3) Sense group	ordered, I through VI (see Appendix E for designations).
4) Scan fate	an identification of the particular scan specification which is believed would have achieved match condition, for the student answer given. (Note : seeming inconsistencies can be resolved by considering (a) sequence of scans, together with (b) sequence of elements in the answers).
5) *Answer type*	classification of answers according to categories discussed on page 6.

6) First pass program reaction	refers to item numbers in Appendix D.
7) Sense score	an evaluation of performance (0-1) based on the following criteria : Does the first pass reaction make sense, *and* is the prospect of sensible second-pass reaction good ?
8) Motivation rating assigned by the instructor	this is a rating intuitively assigned by the instructor, based on the content and structure of the student's answer : M0 = no apparent motivation M1 = polite regret, some motivation M2 = fair-to-good motivation M3 = weighting factor for Group V answers, in which good to excellent motivation can be assumed regardless of wording.
9) Revision required	
(1) + scan	decision to improve scan specification, or to scan for additional items and ideas.
(2) M-Group	answers which it is expected might be better handled through motivational channeling. (See pages 257-258)

5. Initially we tried to distinguish between sense from the program viewpoint and sense from the student's viewpoint. This raised problems of assigning credit for fortuitous first-pass performance, and in the assessment of partial relevance, so it was decided to combine the two on an empirical basis. We consider that *if* the frame performs meaningfully for the student it is immaterial whether or not the operation was planned in exactly the way it takes place, and whether or not all of the expository material one might have liked to call forth in a given situation actually appears. Credit is taken for situations where slight discrepancies in meaning stand a very good chance of being corrected in the next pass.

A-Frame: Performance Summary

(1)	(2)	(3)	(4)	(5)	(6)	(7)	(8)	(9)	
Number	Answer	Item Group	Item Pair	Answer Type	1st Pass Program Reaction	Item Score	Moderation Rating	Revision required	
								+ SCAN	M-Group
● 1	I don't know.	I	Dunno	$A_{I,P,N}$	9	1	0		×
● 2	I don't know.	I	Dunno	$A_{I,P,N}$	9	1	0		×
● 9	I really haven't the slightest idea.	I	Dunno	$A_{I,P,N}$	9	1	0		×
● 11	I've only had occasion to use the microfiche on reels, so I can't really say.	IIa	Dunno	$A_{I,U}$	9	1.3	3	×	
● 3	I don't know enough to decide.	II	Dunno + Guess	$A_{I,P,N}$	6	1.3	1		×
● 4	I don't know what these are exactly so can't tell.	IIa	Dunno + Guess	$A_{I,P,N}$	6	1.3	1		×
● 7	Don't have enough experience to judge.	II	Dunno + Guess	$A_{I,P,N}$	8b	1			
● 10	Not used here to answer this — would need to know properties of microforms and kinds/quality of avail. photocopy	IIa	Fail ● 1	$A_{I,U}$	12	0	1	×	×
● 5	I don't know. They all seem about equivalent to me.	III	Dunno + Guess	$A_{I,U}$	6	1.3	2	×	×
● 12	Please define opaque microcard and aperture card.	IV	Dunno + opaque	$A_{I,P,N}$	7b	1	3		
● 6	I don't know what an aperture card is. Not (1) or (2)	IV	Dunno + apert.	$A_{I,P,N}$	7d	1	3		
● 8	I can't honestly compare because I am not familiar with all 3 of the media.	IV	Dunno + apert.	$A_{I,U}$	7d	0	2	×	×
● 13	I believe the opaque microcard is more useful.	V	Why 2	$A_{I,P,N}$	2b	1	3		
● 14	Transparent film sheet; just seems easy to store and use.	V	Why 1	$A_{I,U}$	2b	0	3	×	

● 17	I think the microfiche would be best because I think it can contain more info. than the other forms.	V	Why 1	$A_{1,2,3}$	2a	0	3	+	
● 18	3. The aperture card can be handled mechanically.	V	Why 3	$A_{1,2,3}$	4a	0	3	+	
● 19	Aperture card, because the citation info. (at) is readable without inserting to a reader.	V	Why 3	$A_{1,2,3}$	4a	0	3	+	
● 20	3. Aperture cards because they are processed by machine easily.	V	Why 3	$A_{1,2,3}$	4a	0	3	+	
● 21	The opaque microcard is adequate.	V	Why 2	$A_{1,2,3,4}$	4a	1	3		
● 22	The microfiche offers better reproduction (visually) than the microcard.	V	Why 1	$A_{1,2,3}$	2a	0	3		
● 23	I would suggest the microfiche, since complete information can be stored in a small space.	V	Why 1	$A_{1,2,3}$	2a	0	3	+	
● 24	● 2 is most suitable. As a positive copy of the text it is less objectionable to the user.	V	Why 2	$A_{1,2,3}$	4a	0	3	+	
● 25	The microfiche has proved quite useful for cartographic information.	V	Why 1	$A_{1,2,3}$	2a	1	3		
● 15	Aperture cards too awkward for a big file, easier to enlarge microfiche for convenient viewing.	V	Why 3	$A_{1,2,3}$	4a	0	3	+ (special)	
● 16	None. I believe in hard copy. I dislike sitting in dark rooms and looking at idiot boxes.	VI	REJECT	$A_{1,2,3,4}$	10a	1	0		

RECAPITULATION :

Overall match score			24 (96 %)
Issue Score			12 (48 %)
Motivation a	(0)	Weight :	0
Motivation 1	(8)		8
Motivation 2	(3)		6
Motivation 3	(14)		42
Motivation composite			56
Motivation possible max.			75
Motivation factor			56/75

Group V responses	12 (48 %)
All others	13 (52 %)
Item improvement required for « B-Frame »	13 (52 %)

APPENDIX G

« B-FRAME » FLOWCHART

1. Attached.

2. The attached flowchart reflects program changes incorporated in the « B-Frame ». Appendix B notes apply (p. 246-248), except as provided below :

c) (revised) The group of operations to the left of « DUNNO » is devoted to the provision of information intended to help the student solve the problem. If no specific information need is detected, his response is tested for motivational indicators (M_0, M_-, & M_+) in three separate scans whose specifications are given in Appendix H. The Q-return display for each of these differs from the other two in the way it approaches the problem. The general « I don't know » :: GAER, and « I don't know » scans are retained in order to catch all such answers that escape earlier search.

g) (new) Sendlines are increased from five to six in number, and a slight structural modification is provided : Instead of a single block of text ending with « Does this explain the term adequately for you ? » a differently worded ending is used for students who have been assessed « M_+ » and are first being reinforced on something they may have some knowledge of : « I hope this confirms your understanding of ... (term) ... What would you like to follow up next ? »

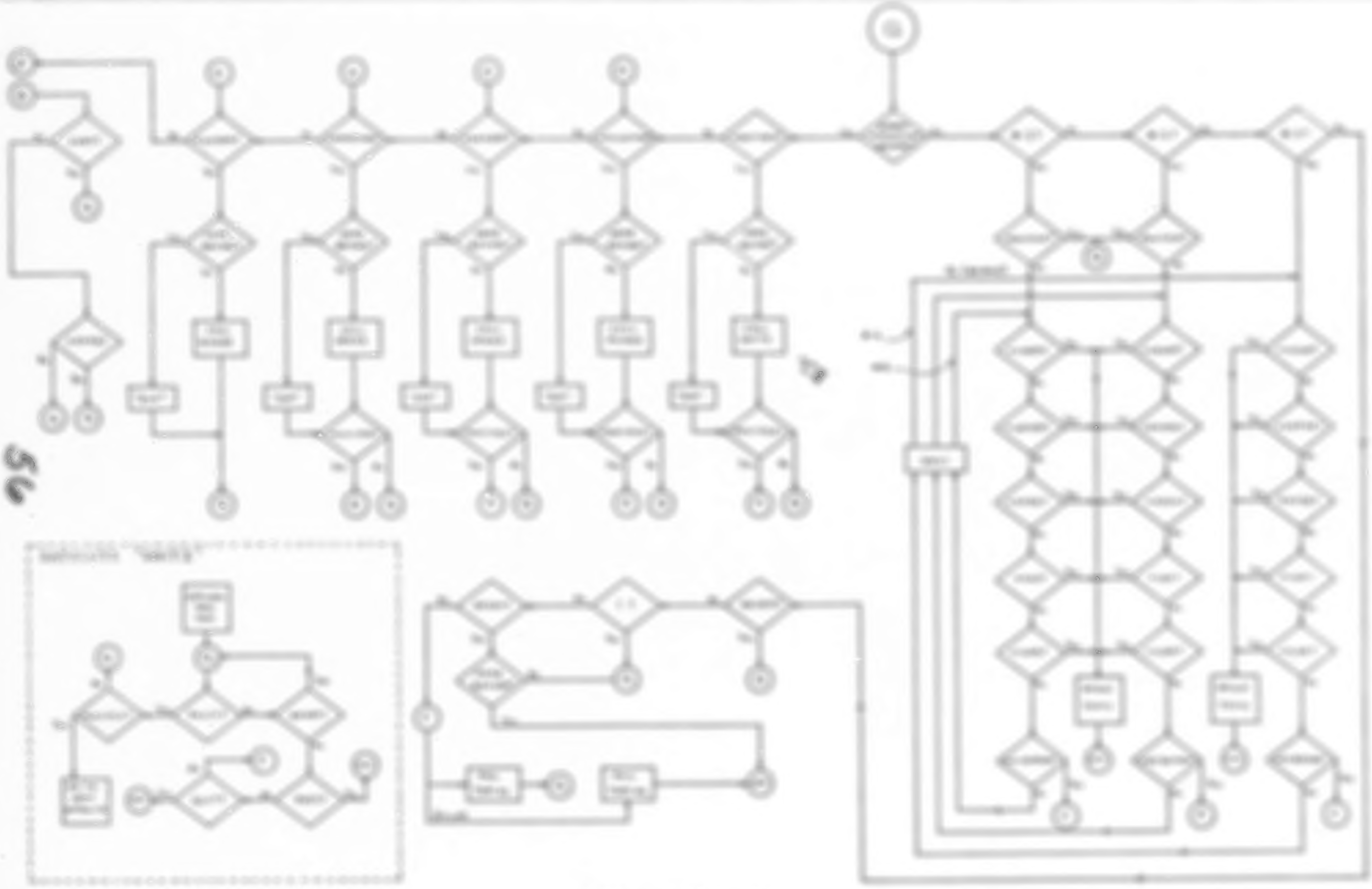

B-Frame Flowchart

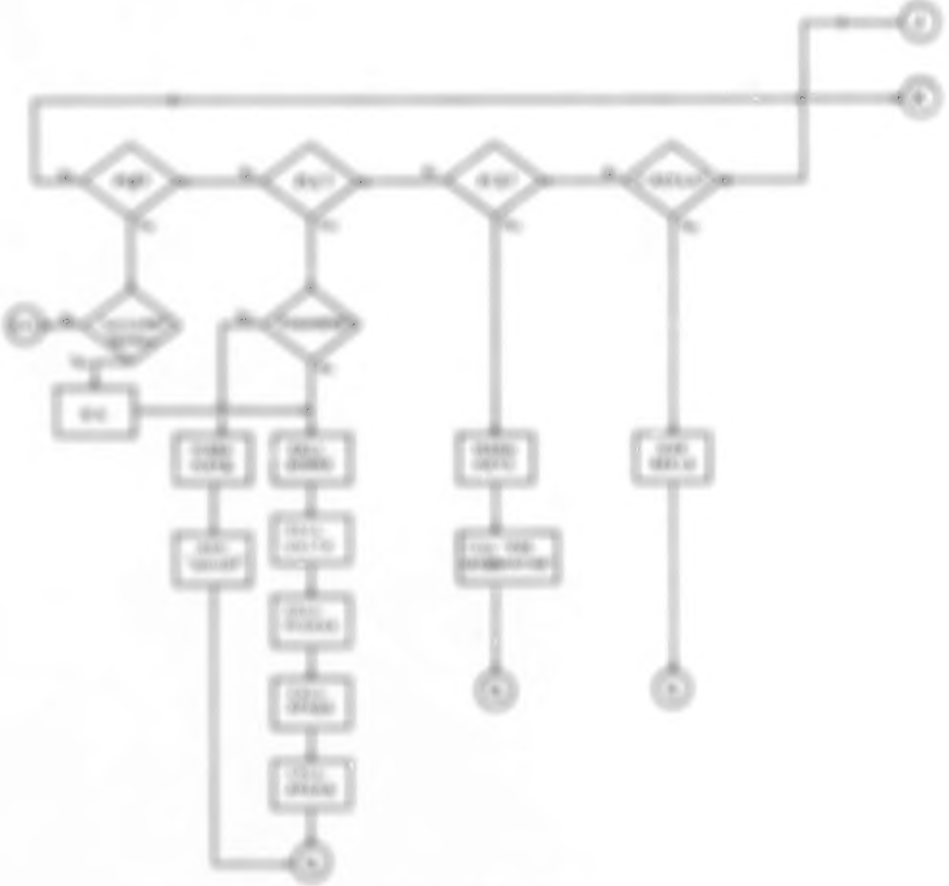

B-Frame Flowchart (Continuation)

APPENDIX H

THE « B-FRAME » PROGRAM

1. Attached.

2. The notes to Appendix C apply (p. 248-249) except as provided below :

8) (omitted)

9) (new) A word partially underlined, in a scan specification, means that only the underlined portion is stipulated as a search requirement. The characters which are not underlined are included only to show the reader what term group the programmer has in mind. For example « STORAGE » will accept « store », « stored », « storing », and « storage » but not « stop ». It will also accept the name of the bird, but the programmer is willing to take the risk.

3. It should not be imagined that a CAI programmer would often invest in a single frame the amount of work which has clearly gone into both the A-Frame and the B-Frame. As a stand-alone unit we had to provide it with features which normally would need to be written only once for an entire course, e.g., the « POSIT » and « NEGAT » expansions, and the M-series of scan specifications. Also it should be mentioned that the command statements can be put together quite rapidly after one has worked with a language for a while. As a matter of record, one person designed and wrote the « A-Frame » in a little over four hours.

«9» Source Program

Label	Code	Display text and input item specifications	Control statements
EXPO	T	(Initial statement and question)	
MICRO-A	A	(student input)	[illegible]
	M	[illegible]	[illegible]
	M	[illegible]	[illegible]
	M	[illegible]	[illegible]
	M	[illegible]	[illegible]
	M	[illegible]	[illegible]

Label	Code	Display text and input item specification	Control statement
	G	I UNDERSTAND YOU NEED MORE INFORMATION ABOUT «PROB»	IF PROBY > 2 USE TAKUP, CALL UNITE ON UNITY, CALL MICROZ ON MICROY, CALL OPAQE ON OPAQY, CALL APERZ ON APERY, CALL DISNEZ ON DISNEY, JUMP MICROLA
	S	«DUNNO» + = (REEL, REELS, ROLL, ROLLS)	
	G	AS TO REEL MICROFORM VS. SHEET MICROFORMS	USE REELA, JUMP TO MICROLA
	S	«NO»	
	G	IN ORDER TO ENABLE YOU TO DISCRIMINATE... (etc.) ...TYPE «INFORMATION ________»	MARK (MOTC, PUTA), JUMP TO MICROLA
	S	«NO»	
	G	WELL, SUPPOSE WE START BY EXAMINING... (etc.) ...ARE YOU ACQUAINTED WITH ANY OF THESE?	MARK (MOTB, PUTA), JUMP TO MICROLA
	S	«NO?»	
	G	I REALIZE IT IS ALMOST IMPOSSIBLE... (etc.) ARE YOU WILLING TO WORK WITH ME TOWARD A CORRECT SOLUTION?	MARK MOTA, JUMP MICROLA
	S	«DUNNO» (ALL, ANY)	
	G	ONE OF THESE IS SUPERIOR IN REPRODUCIBILITY, COST, GENERAL USE, ETC. DO YOU NEED MORE INFORMATION? IF SO, TYPE «CLARIFY ________»	JUMP TO MICROLA

Label	Code	Display text and input text specifications	Control statements
	R	<DUNNO> ∨ <CARE>	
	G	I DON'T UNDERSTAND WHAT YOU NEED TO HAVE CLARIFIED.	JUMP TO MICRO.A
	R	NOT COMPETENT, INCOMPETENT, ILL EQUIPPED, NOT PREPARED, NOT EQUIPPED, ILL PREPARED	
	G	I'LL BE GLAD TO EXPLAIN ANY OF THE TERMS I'VE USED, IF YOU WISH. JUST TYPE <CLARIFY ____>.	JUMP TO MICRO.A
	R	POSITIVE, NEGATIVE	
	G	MICROCARD IS ALWAYS DISTRIBUTED AS A POSITIVE; MICROFICHES AND APERTURE CARDS MAY BE HAD IN EITHER POSITIVE OR NEGATIVE VERSIONS. ASIDE FROM THIS CONSIDERATION, WHAT WOULD BE YOUR CHOICE?	JUMP TO MICRO.A
	R	(<N.1>, <N.2>, <N.3>) = (NOT, INSUFFICIENTLY, INADEQUATE, TOO, OVER, OVER-, UNACCEPTABLE, EXCESSIVE, UNDUE, UNDULY) = ‡, (or inverse)	(Note : ‡ signifies blank)
	G	PLEASE REPHRASE YOUR REPLY, STATING THE PREFERRED TYPE FIRST	JUMP TO MICRO.A
	R	<N.1>, <N.2>, <N.3> (require 2, any order)	
	R	ALL, ANY	
	G	SEE IF YOU CAN PICK JUST ONE, ON THE BASIS OF WHAT YOU CAN LEARN FROM ME ON THE SUBJECT.	JUMP TO MICRO.A

Label	Code	Display text and input term specification	Control statement
[illegible]	[illegible]	[illegible]	
[illegible]	[illegible]	YOU ARE CORRECT IN PICKING [illegible], BUT THE [illegible]	JUMP TO NEXTFRAME
[illegible]	[illegible]	[illegible]	
[illegible]	[illegible]	YOU ARE CORRECT IN PICKING [illegible]	JUMP TO NEXTFRAME
	[illegible]	[illegible]	
[illegible]	[illegible]	YOU ARE CORRECT IN PICKING [illegible]	JUMP TO NEXTFRAME
	[illegible]	[illegible]	
	[illegible]	[illegible]	JUMP TO NEXTFRAME
	[illegible] [illegible] [illegible] [illegible] [illegible] [illegible]	[illegible]	(JUMP TO NEXTFRAME OR TO [illegible], DEPENDING ON [illegible])

Label	Code	Display text and input text specifications	Control statements
	G	CAN YOU COMPARE THEM, NOT ON THE BASIS OF EXPERIENCE, BUT MORE ON THE BASIS OF INFORMATION? IF YOU WOULD LIKE TO KNOW MORE ABOUT THE OTHER FORMS, OR ABOUT THE GENERAL REQUIREMENTS FOR DISSEMINATION OF TECHNICAL LITERATURE, JUST TYPE «CLARIFY ________».	JUMP TO [illegible]
	S	OBJECT, HATE, HATED, DISLIKE, «WEIGHT» LIKED, «WEIGHT» LIKE, «WEIGHT» CARE FOR	
	G	ASIDE FROM YOUR PERSONAL FEELINGS IN THE MATTER CAN YOU EXPRESS AN OPINION AS TO WHICH MIGHT BE LEAST SUITABLE FOR THE STATED PURPOSE?	JUMP [illegible]
	S	«POINT»	IF [illegible] MARK [illegible], IF [illegible] JUMP [illegible]
	G	WHICH?	IF [illegible] MARK [illegible], IF [illegible] JUMP [illegible]
[illegible]	G	WHICH ONE WOULD YOU LIKE ME TO DESCRIBE FIRST? TYPE «DESCRIBE ________».	JUMP [illegible]
[illegible]	G	SHALL WE TAKE THEM UP ONE AT A TIME? SUPPOSE WE START WITH THE PROBLEM OF DISSEMINATION OF TECHNICAL LITERATURE. FOLLOWING THAT, YOU CAN ASK FOR INFORMATION ON OTHER ELEMENTS OF THE PROBLEM.	
	S	«WEIGHT»	IF [illegible] USE [illegible], CALL [illegible], JUMP [illegible]

Label	Code	Display text and input item specifications	Control statements
	G	PERHAPS YOU SHOULD SIGN OFF, THEN.	JUMP TO SIGNOFF
	R	[illegible]	
	G	WHY?	TALLY (ANSV, [illegible]), JUMP [illegible]
	R	[illegible]	
	G	WHY?	TALLY (ANSV, [illegible]), JUMP [illegible]
	R	[illegible]	
	G	WHY?	TALLY (ANSV, [illegible]), JUMP [illegible]
	R	[illegible]	IF [illegible] JUMP [illegible], IF [illegible] JUMP [illegible], IF [illegible] JUMP [illegible]
	R	[illegible]	IF [illegible] JUMP [illegible], IF [illegible] JUMP [illegible], IF [illegible] JUMP [illegible]
	R R R R R R	[illegible] [illegible] [illegible] [illegible] [illegible] [illegible] (similar (with negatives))	(similar to above)

Label	Code	Display text and input item specifications	Control statements
	[illegible]	[illegible]	(Similar to preceding)
	[illegible]	[illegible]	(Similar to preceding)
	[illegible]	[illegible]	JUMP TO [illegible]
	[illegible]	[illegible]	JUMP TO [illegible]
	[illegible]	[illegible]	JUMP TO [illegible]
[illegible] [illegible] [illegible] [illegible] [illegible]	[illegible]	[illegible] [illegible] [illegible] [illegible] [illegible]	
[illegible]	[illegible]	[illegible]	
[illegible]	[illegible]	WE WILL TAKE THEM UP IN THAT ORDER.	
[illegible]	[illegible]	[illegible]	
[illegible]	[illegible]	[illegible]	
[illegible]	[illegible]	[illegible]	
[illegible]	[illegible]	[illegible]	
[illegible]	[illegible]	[illegible]	

Label	Code	Display text and input text specification	Current comments
A0	T	DON'T HAVE, NOT HAVE, HAVEN'T, DOESN'T HAVE THERE AREN'T	
A1	T	ABSENCE, WITHOUT, LACKING, EVEN, NEVER, ENOUGH, BASIC, [illegible], [illegible], INADEQUATE	
B0	T	LEARN, FIND OUT, CLARIFY, [illegible], [illegible], [illegible]	
C1	T	IDEA, NOTION, [illegible], CONCEPT, [illegible]	
C2	T	EXPLANATION, DEFINITION, DEFINE, CLARIFICATION ELABORATION, EXPLICATION, INFORMATION	
D1	T	NEED, REQUIRE, HELP	
D2	T	DEFINE, FURNISH, GIVE, EXPLAIN, TELL, SUPPLY, ACQUAINT, ELUCIDATE, EXPLICATE	
D3	T	KNOWLEDGE, FACTS, INFORMATION, DATA, EXPERTISE, INCOMPETENCE	
E1	T	NOT ABLE, UNABLE, CAN'T, CANNOT, CAN NOT	
CONFUSED	T	DON'T KNOW, CONFUSED, CAN'T DECIDE, CAN'T CHOOSE, UNDERSTAND, [illegible], MAKE SENSE, NOT SURE, UNSURE, DON'T UNDERSTAND, WHAT	
CLEAR	T	(anything)	
POSIT	T	(Some of affirmation, including word <POSITIVE>)	
NEGAT	T	(Some of negation, including word <NEGATIVE>)	

Label	Code	Display text and input item specifications	Control statements
PLUSCAP	T	CAPACITY, SIZE, VOLUME, SPACE, CONTAIN, HOLD, HOLDS, HELD, MORE INFORMATION, STORE, CONVERT, CONVERTS	
PLUSCIT	T	TITLE, HEADING, CITATION, IDENTIFICATION, BIBLIOGRAPHICAL, REFERENCES	
PLUSCLAR	T	CLEAR, VIEWING, RESOLUTION, READER, DISPLAY, SCREEN	
PLUSCOP	T	COPY, COPIES, COPYING, BLOW UP, BLOW BACK, BLOWBACK ENLARGEMENT, REENLARGEMENT	
PLUSDIST	T	EASY DISTRIBUTE, MAILING, SENDING, DISSEMINATION	
PLUSMECH	T	MACHINE, AUTOMATION, MECHANICAL	
PLUSEXPER	T	I HAVE USE, I KNOW ABOUT, I EXPERIENCE	
PLUSCHEAP	T	CHEAPER, COST, COSTS, ECONOMICAL	
PLUSCONV	T	CONVENIENT, +NEGAT+ DELAY, QUICKLY, SPEED, FASTER +NEGAT+ TROUBLESOME	
PLUSCOMP	T	ROOM, COMPACT, STORAGE, SPACE	
NEGCLEAR	T	DIFFICULT READ, POOR RESOLUTION, BLURRED, DIM, DARK, FUZZY, HURTS EYES, ILLEGIBLE, PRINT SMALL, SMALL PRINT	
NEGLOSE	T	LOSE, LOST, MISPLACED, TOO SMALL	
NEGCONV	T	INCONVENIENT, AWKWARD, TIME CONSUMING, DELAY, TROUBLESOME	
N1	T	1, ONE, FIRST, MICROFICHE, FICHE, TRANSPARENT, FILM SHEET	

Label	Code	Display text and input item specifications	Control statements
N.2	T	2, TWO, SECOND, OPAQUE, MICROCARD	
N.3	T	3, THREE, «NEGAT» ALL (3, THREE), THIRD, LAST	
TRANSFICHE	T	TRANSPARENT (SAME, DIFFERENT) FICHE, FICHE (SAME, DIFFERENT) TRANSPARENT	
MOTS	T	I HOPE THIS CONFIRMS YOUR UNDERSTANDING OF «MICRO.A». WHAT WOULD YOU LIKE TO FOLLOW UP NEXT ?	
ALTERREPO	T	WHAT I MEAN IS : OF THE THREE COMMONEST TYPES OF NON-ROLL MICROFORM, WHICH LENDS ITSELF BEST TO THE DISSEMINATION OF TECHNICAL LITERATURE : FICHE ? MICRO-OPAQUES ? APERTURE CARDS ? BEAR IN MIND COST AND EASE OF MAKING AND DISTRIBUTING COPIES.	

APPENDIX I

[illegible] — « [illegible] »

1. List attached.

2. Appendix D comments (p. 179) apply, with the exception of para. 6 (sample dialogues omitted).

I. *First pass*

Type of answer (numbers and letters establish categories referred to in Appendix E).	Program display reaction ([illegible] — [illegible])
1. Right — both elements	
a. Reason: ease of distribution, of mailing, of sending.	You are correct in picking microfiche, and ease of distribution and use is one of its compelling advantages. Microfiche can be duplicated very readily and inexpensively... (etc.) — (same as corresponding « PICKUP » text in Appendix D) (R)
b. Reason: cost, cheap, inexpensive, save money.	You are correct in picking microfiche, and cost considerations certainly enter into the picture. Microfiche can be duplicated ... (etc., same as above). (R.)
c. Reason: 1.a + 1.b	Good. You correctly picked two of the important advantages of fiche. Microfiche can be duplicated... (etc., same as above). (R)
2. Right — first element only	
a. No reason given	Why?
b. Wrong reason given	
(1) experience (« because had more experience with it »).	Can you compare them more on the basis of information? If you would like to know more about the other forms, or

	about the general requirements for dissemination of technical literature, just type « Clarify ________ ».
(c) capacity	You are correct in picking microfiche, but the reason it is superior for dissemination of technical literature is not that it has greater capacity (which depends on the reduction ratio in use) but on the fact that microfiche can be duplicated ... (etc.) (E)
(d) clarity	(similar to a.b.c above) (E)
(e) knowledge (« the only one I know about »)	(similar to a.b.c above) (E)
(f) (n) (other aspects provided in the program)	(similar to a.b.c above, except that some will exit from the frame while others will require recursion).
3. Wrong — Two first elements	See if you can pick just one, on the basis of what you can learn from me on the subject.
4. Wrong — Wrong first element	
(a) Microcard	Why ?
(b) Aperture card	Why ?
5. Wrong — Don't know	
a. « don't know » with no additional element following, and no match on motivational indicators.	I'll be glad to explain any of the terms I've used, if you wish. Just type « Clarify ________ ».
6. Wrong — Don't know + (unidentified matter)	
a. « don't know » with added material, but no match on motivational indicators	I don't understand exactly what you need to have clarified.
b. Mo	I realize it is almost impossible for you to answer without knowing something about the types of microform mentioned

70

	and about the factors involved in dissemination of technical literature. I'd like to help you tackle the problem from the beginning by supplying all the information you need. Are you willing to work with me toward a correct solution?
c. No	Well, suppose we start by examining the items you may already have heard about. I may be able to add some useful information about them. How about microfiche? Microcard? *Aperture* card? The dissemination of technical literature? Are you acquainted with any of these?
5. Wrong — Don't know 1 single identified	
a. Unit, unitized	I understand you need more information about unit, or unitized, microforms. A unit microform is one which... (etc., same as corresponding text in *Appendix D*)
b. Transparent, film, sheet, fiche, microfiche	(similar to 5a)
c. Opaque, microcard	(similar to 5a)
d. *Aperture*	(similar to 5a)
e. Dissemination, technical literature	(similar to 5a)
6. Wrong — Don't know 1 multiple identified	
a. *Any* combination of 5a, 5b, 5c, 5d, 5e	I understand you need more information about (5a, 5b, 5c, 5d, 5e). We will take them up in that order. (Stacked subroutines of 5a-e)
7. Wrong — Don't know 1 miscellaneous	

a. Any, all	One of them is superior in reproduceability, cost, general use, etc. Do you need more information? If so, type «Clarify ____» for explanation of individual elements.
b. No experience	I'd like you to choose not on the basis of experience but on the basis of available information, if possible. Type «Clarify ____» for explanation of individual elements.
c. Positive, negative	Microcard is always distributed as a positive; microfiche and aperture cards may be had in either positive or negative versions. Aside from this consideration, what would be your choice?
d. Not competent, ill equipped, not prepared, not equipped	I'll be glad to explain any of the terms I've used, if you wish. Just type «Clarify ____».
10. Wrong — Rejection	
a. Dislike	Aside from your personal feelings in the matter, can you express an opinion as to which might be least unsuitable for the stated purpose?
b. Expletive.	(same as corresponding text in Appendix D. No evidence yet as to how this might work).
11. Wrong — Request	
a. Clarify, define, info, describe	(same as 7 and 8. The variation between request words for 11a and 11b is provided to facilitate channeling of operations called forth by these terms, and for scoring if and when incorporated).
12. Fail	How's that again? I don't understand your response as

	worded. Please explain more fully.

II. Second pass

13. Right — Both elements	(not applicable. (Fusion completed on first pass)).
14. Right Second Element, first element right	
a. Reason : ease of distribution, of mailing, of sending	(same as 1.a) (R)
b. Reason : cost, cheap, inexpensive, save money	(same as 1.b) (R)
c. Reason : 1.a + 1.b	(same as 1.c) (R)
15. Right Second Element first element wrong	(same as corresponding sections in Appendix D)
16. Wrong Second Element, first element right.	(ditto)
17. Wrong — Don't know	Repeats 5.
18. Wrong — Don't know — Unidentified	Repeats 6.
18. a. Wrong — Don't know + single identified	Similar to 7.
19. Wrong — Don't know + multiple identified	Similar to 8.
20. Wrong — Don't know + miscellaneous	Repeats 9.
21. Wrong — Rejection	
a. Dislike	Repeats 10.a
22. Wrong — Request	(same as 5, 8 and 11)

SUBROUTINE FOLLOWING 7

23. Right	
a. + yes +	Fine. If you are in doubt about any of the other terms, don't hesitate to ask. Here is the original question again. (Repeats question).
24. Wrong	
a. b. + no +	Rather than spend more CAI time on it now, I suggest that you either sign off and seek out an instructor, or type + PASS + and I will go on to the next question. (8)

SUBROUTINE FOLLOWING 8

25. Right	
a. + yes +	In that case we will pass to the meaning of (next recurring item of requested information).
26. Wrong	
a. + no +	(same as 24)

SUBROUTINE FOLLOWING 8b (Handled within main frame)

27. Right	
a. + yes + alone	Which one would you like me to describe first? Type + Describe ______ +.
b. + yes + with item, or item alone	I understand you need more information about ... (item) ... (etc.)
28. Wrong	
a. + no +	Perhaps you should sign off, then.

SUBROUTINE FOLLOWING 4a (Handled within main frame)

29. Right	
a. « yes » alone	Which?
b. « yes » with item, or item alone	« (SIGNED) » is automatically inserted in response, so that program goes direct to satellite
30. Wrong	
a. « no »	Shall we take them up one at a time? Suppose we start with the problem of dissemination of technical literature. Following that, you can ask for other elements of the problem.

31. FAIL — If entered on 1st pass (same as 14, above)

32. FAIL — Second instance Admit frame failure.

III. *Third part* (Predictable only if a subroutine is used on the 1st or 2nd pass).

SUBROUTINE FOLLOWING 8 and 9

33. Wrong — continue	
a. « PASS »	All right. But please get clarification at the first opportunity. (X)
34. Wrong — Exit	
a. « I quit »	You are now signed off. (X)

35. FAIL — If ◆31 and ◆32 have been used, program falls through to the next frame.

APPENDIX J

« B » STUDENT ANSWERS AND REACTION RESPONSES

This *Appendix* lists the student answers of the « B » set, together with the reactive text which would have been called forth in the « B-Frame ».

STUDENT INPUT		REACTION TEXT DISPLAY
● 1	I don't even know what a microfiche is.	I understand you need more information about microfiche - (use of MICROX satellite) - Does this explain the term adequately for you?
● 2	I don't know.	I realize it is almost impossible for you to answer without knowing something about the types of microforms mentioned and about the factors involved in dissemination of technical literature. I'd like to help you tackle the problem from the beginning by supplying all the information you need. Are you willing to work with me toward a correct solution?
● 3	I am not familiar with programming.	I don't understand what you need to have clarified.
● 4	I have not had any experience with any, so cannot decide.	Can you compare them not on the basis of experience but on the basis of information? If you would like to know more about the general requirements for dissemination of technical literature, just type « Clarify ______ ».
● 5	I am not sufficiently acquainted with the characteristics of these different microforms to answer.	Well, suppose we start by examining the items you may already have heard about. I may be able to add some useful information about them. How about microfiche? Microcard? Aperture card? The dissemination of technical literature? Are you acquainted with any of these?

STUDENT INPUT		REACTION TEXT DISPLAY
● 6	Lack of knowledge prevents a considered answer.	(Same as ● 5)
● 7	What's an aperture card. To tell the truth, I strongly dislike microforms and readers.	I understand you need more information about aperture cards. : (text of [illegible] omitted) : Does this explain the term adequately for you?
● 8	Microfiche, since it is easy to handle, store, and reproduce.	You are correct in picking microfiche, and ease of storing is certainly an advantage, but one which is also shared by the other two forms. Microfiche can be duplicated very readily and inexpensively, and in fact is the standard used by the Federal government for distribution of Clearinghouse, DOD, NASA, AEC, and ERIC documents, which include a large portion of our technical literature output... (etc.)
● 9	I don't understand all the distinctions among the three types.	One of them is superior in reproducibility, cost, general use, etc. Do you need more information? If so, type «Clarify ———».
● 10	3. Because I don't quite know what the other two are!	See if you can pick just one, on the basis of what you can learn from me on the subject.
● 11	3, as it contains more information (data) readily & quickly available.	You are correct in picking microfiche, but the reason it is superior for the dissemination of technical literature is not that it has greater capacity (which depends on the reduction ratio in use) but on the fact that microfiche can be duplicated... (etc.) (same as ● 8)
● 12	I want aperture cards. Aperture cards are fun.	Why?

STUDENT INPUT		REACTION TEXT DISPLAY
●13	1 - easy storage	(same as ●8)
●14	Fiche. Equipment feasibility, cost, and eventual wide availability.	You are correct in picking microfiche, and cost considerations are an important factor. Microfiche can be duplicated very readily and inexpensively ... (etc.) (same as ●8)
●15	Type 1. Largest amount of experience with this type.	You are correct in picking microfiche. Can you compare them not on the basis of experience but on the basis of information ? (etc.) (same as ●4)
●16	It depends on the dissemination system and the ultimate user(s), but I assume fiche.	Why ?
●17	Microfiche, because of Federal standard, cost, and availability of readers.	(same as ●14)
●18	1. Density and handling are superior to 3. copying superior to 2.	(same as ●13 ——— FAULT ?)
●19	Microfiche. Large amount of information stored by unit and «flexible» display.	(same as ●11)
●20	I have used microfiche with a projector and it seems to be quite satisfactory. I have not used the other two so have no opinion of their usefulness.	(same as ●15)
●21	What is opaque microcard ? What is aperture card ?	I understand you need more information on microcard - aperture card. We will take them up in that order. (Text of OPAQUE omitted) - Does this explain the term adequately for you ?

STUDENT INPUT		REACTION TEXT DISPLAY
#22	Don't know what aperture card is. What is microform card with all the pages on one card called?	I understand you need more information on aperture card - (text of APERZ satellite) - Does this explain the term adequately for you?
#23	What is an aperture card?	(same as #22)
#24	I don't know what a microcard or aperture card are. I prefer hard copy anyway.	(same as #21)
#25	Microfiche, I guess. Access time in microfilm is too long I have never used opaque microcard.	See if you can pick just one, on the basis of what you can learn from me on the subject.

APPENDIX K

a B-PHASE 2 PERFORMANCE SUMMARY

1. Attached.
2. For explanation of column headings, see Appendix F (p. 270-271).

B-Fracne Performance Summary

(1)	(2)	(3)	(4)	(5)	(6)	(7)	(8)
Number	Answer	Item Group	Item Pair	Answer Type	1st pass program reaction	Issue Score	Motivation Rating
● 2	I don't know.	I	Mo	$A_{1,pnd}$	6b	1	0
● 3	I am not familiar with programming.	II	Demo + Curb	$A_{1,pnd}$	6a	1/2	1
● 4	I have not had any experience with any, so cannot decide.	II	Demo + Exper	$A_{1,pnd}$	9b	1	1
● 5	I am not sufficiently acquainted with the characteristics of these different microforms to answer.	II	MS	$A_{1,pnd}$	6c	1	1
● 6	Lack of knowledge prevents a considered answer.	II	MS	$A_{1,pnd}$	6c	1	1
● 9	I don't understand all the distinctions among the three types.	II	Demo + all	$A_{1,pnd}$	9a	1	2
● 7	What's an aperture card. To tell the truth, I strongly dislike microforms and readers.	IV	Demo + aper	$A_{1,pnd}$	6d	1	1
● 1	I don't even know what a microfiche is.	IV	Demo + Fiche	$A_{1,pnd}$	7b	1	1
● 25	What is opaque microcard? What is aperture card?	IV	Demo + opaque + aper	$A_{1,pnd}$	8a	1	3
● 20	What is an aperture card?	IV	Demo + aper	$A_{1,pnd}$	7d	1	3
● 24	I don't know what a microcard or aperture cards are. I prefer hard copy anyway.	IV	Demo + opaque + aper	$A_{1,pnd}$	8a	1	3
● 22	Don't know what aperture card is. What is microform card with all the pages on one card called?	IV	Demo + aper	$A_{1,pnd}$	7d	1	3
● 10	1. Because I don't quite know what the other two are!	V	MS + MS	$A_{1,pu}$	3	1	3
● 8	Microfiche, since it is easy to handle, store, and reproduce.	V	M.I + Fluorescamp	$A_{1,pnd}$		1	3
● 11	1. as it contains more information (data) readily & quickly available.	V	M.I + rep	$A_{1,pnd}$	2b (2)	1	3

80

(1)	(2)	(3)	(4)	(5)	(6)	(7)	(8)
Number	Answer	Item Group	Item Date	Answer Type	1st pass program reaction	Item Score	Motiva-tion Rating
[illegible]	I want aperture cards. Aperture cards are fine.	V	N.3	[illegible]	3a	1	—
[illegible]	Microfiche I guess. Access time to microfilm is too long. I have never used opaque microcards.	V	N.3	[illegible]	3	0.5	3
[illegible]	1 — Easy storage.	V	N.3 + [illegible]	[illegible]	3a	1	3
[illegible]	Fiche. Equipment flexibility, cost, and renewal with availability.	V	N.3 + [illegible]	[illegible]	3a	1	3
[illegible]	Type 1. Longest amount of experience with this type. Reproduction and enlargement quality is good.	V	N.3 + [illegible]	[illegible]	3a (1)	1	3
[illegible]	It depends on the dissemination system & ultimate user(s), but I mean [illegible]	V	N.3	[illegible]	3a	1	3
[illegible]	Microfiche, because of existing Federal standards, cost, and availability of readers.	V	N.3	[illegible]	3a	1	3
[illegible]	1. Density and handling are superior to 3, copying superior to 2	V	N.3	[illegible]	3	0	3
[illegible]	I have used microfiche with a projector and it seems to be quite satisfactory. I have not used the other two so have no opinion of their usefulness.	V	N.3 + N.3	[illegible]	3	1	3
[illegible]	Microfiche. Large amount of information stored by unit and a flexible a display.	V	N.3 + [illegible]	[illegible]	3a	0	3

RECAPITULATION:

Overall match score			[illegible]	Motivation 3	[illegible]	[illegible]
Item Score			[illegible]	Motivation composite		[illegible]
Motivation 4	[illegible]	Weight	[illegible]	Motivation possible max.		[illegible]
Motivation 1	[illegible]		[illegible]	Motivation factor		[illegible]
Motivation 2	[illegible]		[illegible]	Group V responses		[illegible]

ABSTRACT

A stand-alone CAI frame was written around a question designed to elicit a wide variety of replies, in order to measure the utility of reply analysis in refining individual frames. Half of a real sample of fifty handwritten responses were submitted to the frame, with a match score of 98 % and a sense score of 48 %. After revision, the frame attained a match score of 100 % and a sense score of 88 %, on the other half of the test set.

The authors, discuss selected-string-match CAI strategies, including the use of attitudinal state combinations to indicate cognitive state. Mechanics of the CAI « macroframe » and its « satellites » are detailed.

RÉSUMÉ

A propos d'un projet sur l'instruction par les machines à calculer, un seul cadre isolé fut écrit sur une question précise afin d'obtenir une grande variété de réponses, et d'être à même de mesurer la valeur de l'analyse des réponses fournie par les cadres individuels. La moitié d'un vrai modèle de cinquante réponses écrites à la main furent soumises au cadre, avec une congruence statistique de 98 % et un système de compréhension de 48 %. Après avoir été revisé, le cadre atteignit un résultat de 100 %, et un système de compréhension de 88 % sur l'autre moitié du contrôle d'essai. Les auteurs discutent les stratégies de « selected string match CAI » comprenant l'usage des combinaisons pertinentes pour indiquer l'état des connaissances. On discute les mécaniques au grand cadre et ses satellites.

ZUSAMMENFASSUNG

Für eine Frage der Programmierten Instruktion wurde ein unabhängiger Rahmen geschrieben, der entworfen wurde um eine Reihe von Resultaten zu bekommen und um die Brauchbarkeit der Antwortenanalyse zur Verfeinerung einzelner Rahmen zu messen. Die Hälfte der Originalserie von fünfzig handgeschriebenen Antworten wurde in den Rahmen gefüttert und erreichte einen Erfolgsgrad von 98 % und einen Verständnisgrad (von der Seiten des Systems) von 48 %. Nach der Revision erzielte der Rahmen mit der anderen Hälfte der Versuchsserie einen Erfolgsgrad von 100 % unter Verständnisgrad des Systems von 88 %.

Die *Autoren* beschreiben die *Auswahl-Aufeinanderfolge-Anpassung (selected string match)* Strategien des Programmierten Unterrichts, einschliesslich die Anwendung von verhaltensbehandelnden Kombinationen, um auf den Erkenntnisgestalten hinzuweisen. Die Mechanik des « Makrorahmens » und seiner « Satelliten » werden beschrieben.

JOSEPH C. MEREDITH was born at Oakland, California on June [illegible], [illegible]. B. A. Olivet College, Olivet, Michigan ([illegible]) and M.L.S. School of Librarianship, University of California ([illegible]). Between [illegible] and [illegible]: Commissioned service, U.S. Navy; studies in International Law and Strategy & Tactics, U.S. Naval War College, Newport, R.I. NATO staff duties, R&D in amphibious warfare, various commands. From [illegible] to [illegible] Project staff member and from [illegible] to [illegible] Project Manager, CAI component of a project entitled « An Information Processing Laboratory for Education and Research in Library Science », ([illegible]). Co-Director of Information Processing Laboratory in the School of Librarianship, University of California. Is now Assistant Director (Acting) of the Research Center for Library and Information Science, Graduate Library School, Indiana University, Bloomington, Indiana, [illegible].

Publications:

— « The CAI Author/Instructor — an Introduction and Guide » (Englewood Cliffs, New Jersey, Educational Technology, Inc., [illegible]).

— « Machine as Tutor » in *Educational Technology* IX (September [illegible]).

— « DISCUS — A New CAI Programming Language » (with Steven S. Silver) *Institute of Library Research Technical Paper* N° [illegible] (February [illegible]).

DOUGLAS FERGUSON was born on July [illegible], [illegible]. B.A. (Philosophy) Marlboro College ([illegible]). M.L.S. School of Librarianship, University of California ([illegible]). Post-master's course work, ditto. From [illegible] to [illegible] Team Member, Indian National Scientific Documentation Centre, New Delhi. Study and proposal for the National Electronics Information Network. From January to September [illegible] specialist in CAI Course Development, Institute of Library Research, University of California. Is now editor of the Automation Division, The Stanford University Libraries, Leland Stanford, Jr., University, Stanford, California [illegible].